MERCHANT SHIPPING (YACHTS) REGULATIONS *S.I. 13/2011*

(SECTION 289(1))

[Commencement 28th March, 2011]

Citation.

1. These Regulations may be cited as the Merchant Shipping (Yachts) Regulations.

Interpretation.

2. In these Regulations —

"Act" means the Merchant Shipping Act; Ch. 268.

"The Authority" means The Bahamas Maritime Authority established under section 3 of The Bahamas Maritime Authority Act; Interpretation. Ch. 283.

"The Bahamas Yacht Code" means the Code of Safety for Large Commercial Yachts issued by The Bahamas Maritime Authority specifying standards for safety, security and pollution prevention to be adhered to by applicable yachts registered under the Act.

Application.

3. These Regulations apply to yachts registered under the Act which —

(a) are less than 3000 gross tons;

(b) are 24 metres and over in load line length;

(c) are in commercial use for sport or pleasure;

(d) do not carry cargo; and

(e) do not carry more than 12 passengers.

Compliance with The Bahamas Yacht Code.

4. An owner or master of a yacht registered under the Act shall comply with The Bahamas Yacht Code set out in the Schedule.

SCHEDULE

(Regulation 4)

THE BAHAMAS YACHT CODE FOR LARGE COMMERCIAL YACHTS

The Code of Practice applies to Bahamian registered yachts which:

- are less than 3000 gross tons;
- are 24 metres and over in load line length;
- are in commercial use for sport or pleasure;
- do not carry cargo; and
- do not carry more than 12 passengers

TABLE OF CONTENTS

1. Foreword
2. Definitions
3. Application and interpretation
4. Construction and strength
5. Weathertight integrity
6. Water freeing arrangements
7A. Machinery - vessels of less than 500 GT
7B. Machinery - vessels of 500 GT and over
8A. Electrical installations - vessels of less than 500 GT
8B. Electrical installations - vessels of 500 GT and over
9A. Steering gear-vessels of less than 500 GT
9B. Steering gear - vessels of 500 GT and over
10A. Bilge pumping - vessels of less than 500 GT
10B. Bilge pumping - vessels of 500 GT and over
11. Stability
12. Freeboard
13. Life-saving appliances
14. Fire safety
14A. Structural fire protection - vessels of less than 500 GT
14B. Structural fire protection - vessels of 500 GT and over
15A. Fire appliances - vessels of less than 500 GT
15B. Fire appliances - vessels of 500 GT and over
16. Radio
17. Navigation lights, shapes and sound signals
18. Navigational equipment and visibility from wheelhouse
19. Miscellaneous equipment
20. Anchors and cables
21. Accommodation
22. Protection of personnel
23. Medical stores

24. Shore-ship transfer of personnel
25. Clean seas
26. Manning and personnel certification
27. Passengers
28. Survey, certification, inspection and maintenance
29. Crew agreements
30. Safety management
31. International ship and port facility security code

Annex 1 This Page Intentionally Left Blank

Annex 2 Safety Management System for Vessels under 500 Gt

Annex 3 Open Flame Gas Installations

Annex 4 List of Certificates to be Issued

Annex 5 Bahamas National Annex

Annex 6 Technical Standards for Helicopter Landing Areas

Annex 7 Amendments to the text of Bahamas Yacht Code Edition 1

1. FOREWORD

This Code of Practice ("the Code" or "BYC") is based upon, and provides for an equivalent level of safety to the Large Commercial Yacht Code ("LY2") that was developed jointly by the United Kingdom, its relevant overseas territories and international industry representatives. The Bahamas Maritime Authority wishes to acknowledge and thank the UK Maritime and Coastguard Agency (MCA) for their permission to base this Code upon the LY2 and their cooperation in formulating this Code.

1.1 The Bahamas Maritime Authority ("BMA") is the administration that manages The Bahamas Ship Register on behalf of the Government of the Commonwealth of The Bahamas, whose flag the vessel is entitled to fly.

1.2 Vessels are required to comply with the various Merchant Shipping Regulations of The Bahamas which are relevant to the class of vessel to which they belong. Vessels in commercial or non-commercial use for sport or pleasure do not fall naturally into a single class and, in any case, prescribed merchant ship safety standards may be incompatible with the safety needs particular to such vessels.

1.3 The Code specifically applies to vessels of less than 3000 gross tons ("GT") in commercial use for sport or pleasure (being pleasure vessels "engaged in trade" for the purpose of Article 5 - Exceptions - of the International Convention on Load Lines, 1966 ("ICLL") which are 24 metres in load line length and over or, if built before 21 July 1968, 150 gross tons and over according to the tonnage measurement regulations applying at that date and which do not carry cargo and do not carry more than 12 passengers.

1.4 It is recommended that (non-commercial) pleasure vessels, as defined in Annex 5, The Bahamas National Annex, comply with the standards of the Code.

1.5 The Bahamas has notified the International Maritime Organisation of the Code and its application to pleasure vessels engaged in trade as an equivalent arrangement under the provisions of Article 8 of the International Convention on Load Lines, 1966, Regulations I-5 of the International Convention on Safety of Life at Sea, and Article 9 of the International Convention on Standards of

Training Certification and Watchkeeping for Seafarers 1978 as amended.

1.6 The Code sets required standards of safely, security and pollution prevention which are appropriate to the size of the vessel. The standards applied are either set by the relevant international conventions or equivalent standards where it is not reasonable or practicable to comply. Provision is made within the Code to add any specific national requirements by amending The Bahamas National Annex.

The Bahamas Maritime Authority may consider a specific alternative equivalent standard to any standard required by the Code. Applications which justify either an alternative or exemption from a specific requirement of the Code can be made to The Bahamas Maritime Authority.

1.7 The Bahamas Yacht Code ("BYC") embraces the standards contained within the LY2 Code which has been developed by an industry wide group with the express intention of setting pollution prevention and safety standards which identify with the specific needs of vessels in commercial use for sport and pleasure. The original United Kingdom Large Commercial Yacht Code was reviewed and revised in 2004 to bring it up to date and reflect the needs of the industry. The standards adopted are judged to be at least equivalent in their effect to those required by the international conventions which apply to a particular vessel.

1.8 Compliance with the standards required by the Code will entitle a vessel to be issued with the certification required by the international conventions applicable to the vessel, upon satisfactory completion of the corresponding surveys and inspections.

The certificates demanded by the international conventions which apply to the vessels covered by the Code are summarised in section 28.

1.9 When equipment manufactured in accordance with a recognised International standard is required by the Code, The Bahamas Maritime Authority may accept existing equipment that can be shown to be of an equivalent standard and which does not increase the risk to the ship or its crew and passengers. When such equipment is replaced, the replacement should conform to the standard required by the Code.

1.10 It is recognised that the Code may be required to be revised in the light of experience gained in its application. Section 3.4 makes provision for this.

2. DEFINITIONS

(Note - where a definition is not contained within this Code, guidance should be taken from meanings given within the International Conventions.)

"Aiming Circle" (for helicopter operations – touch-down/ positioning marking) means the aiming point for a normal landing, so designed that the pilot's seat can be placed directly above it in any direction with assured main and tail rotor clearances;

"Approved" in respect to materials or equipment means approved by The Bahamas Maritime Authority or approved by an administration or organisation that is formally recognised by The Bahamas Maritime Authority under the guidance within Bulletin No 71;

"Authorised surveyor" means a surveyor who by reason of professional qualifications, practical experience and expertise is authorised by The Bahamas Mari-time Authority to carry out the survey required for the vessel;

"Aviation Inspection Body" means a body delegated the responsibility of inspecting helicopter landing areas by the Administration. The verification process will include inspection, certification and, where necessary, the application of appropriate operational limitations;

"Bulletin" means a Bulletin published by The Bahamas Maritime Authority that advises owners, masters, other seafarers and other interested parties of advice that may assist in the interpretation or implementation of legislation applicable to Bahamian registered vessels. It includes reference to any subsequent Bulletin amending or replacing the original that is considered by The Bahamas Maritime Authority to be relevant;

"Buoyant lifeline" means a line complying with the requirements of the IMO International Life-Saving Appliances Code;

"Cargo" means an item(s) of value that is carried from one place and discharged at another place and for which either a charge or no charge is made and is not for use exclusively onboard the vessel;

"Classification Society" means one of the "Recognised Organisations" specified in Annex 5 (4.3), The Bahamas National Annex and as may be amended by the latest version of Bulletin No 3;

"Commercial vessel" means a vessel which is not a pleasure vessel;

"Control stations" means those spaces in which the ship's radio or main navigating equipment or the emergency source of power is located or where the fire recording or fire control equipment is centralised;

"D-Circle" means a circle, usually imaginary unless a helicopter landing area itself is circular, the diameter of which is the D-Value of the largest helicopter the landing area is intended to serve. This will not be the case for landing areas of less than 1D width. For landing areas of less than 1D width, the edges of the imaginary D circle, may extend beyond the edge of the load bearing area by up to 0.085D on either side at the mid-point;

"D-Value" means the largest overall dimension of a helicopter when rotors are turning. This dimension will normally be measured from the most forward position of the main rotor tip path plane to the most rearward position of the tail rotor tip path plane (or the most rearward extension of the fuselage in the case of Fenestron or Notar tails);

"Efficient" in relation to a fitting, piece of equipment or material means that all reasonable and practicable measures have been taken to ensure that it is suitable for the purpose for which it is intended to be used;

"Embarkation ladder" means a ladder complying with the requirements of the IMO International Life-Saving Appliances Code;

"Emergency source of electrical power" means a source of electrical power, intended to supply the emergency switchboard in the event of failure of the supply from the main source of electrical power;

"Emergency switchboard" means a switchboard which in the event of failure of the main electrical power supply system is directly supplied by the emergency source of electrical power or the transitional source of emergency power and is intended to distribute electrical energy to the emergency services;

"EPIRB" means a satellite emergency position-indicating radio beacon, being an earth station in the mobile-satellite service, the emissions of which are intended to facilitate search and rescue operations, complying with performance standards adopted by the IMO contained in either Resolution A.810(19) or Resolution A.812(19) and Resolution A.662(16), or any Resolution amending or replacing these from time to time and which is considered by The Bahamas Maritime Authority to be relevant, and is capable of —

(a) floating free and automatically activating if the ship sinks;

(b) being manually activated; and

(c) being carried by one person;

"Existing vessel" means any vessel; the keel of which was laid or the construction or lay-up was started before the implementation of BYC;

"Float-free launching" means that method of launching a liferaft whereby the liferaft is automatically released from a sinking ship and is ready for use, complying with the requirements of the IMO International Life-Saving Appliances Code;

"FOD" means foreign object debris;

"Freeboard" has the meaning given in Annex I of ICLL. The freeboard assigned is the distance measured vertically downwards amidships from the upper edge of the deck line to the upper edge of the related load line;

"Freeboard deck" has the meaning given in Annex I of ICLL. The freeboard deck is normally the upper-most complete deck exposed to the weather and sea, which has permanent means of closing all openings in the weather part thereof, and below which all openings in the sides of the ship are fitted with permanent means of watertight closing.

In a ship having a discontinuous freeboard deck, the lowest line of the exposed deck, and the continuation of that line parallel to the upper part of the deck is taken as the freeboard deck.

At the option of the owner and subject to the approval of The Bahamas Maritime Authority, a lower deck may be designated as the freeboard deck provided it is a complete and permanent deck continuous in a fore and aft direction at

least between the machinery space and peak bulkheads and continuous athwartships.

When a lower deck is designated as the freeboard deck, that part of the hull which extends above the freeboard deck is treated as a superstructure so far as concerns the application of the conditions of assignment and the calculation of freeboard. It is from this deck that the freeboard is calculated;

"Garbage" means all kinds of victual, domestic and operational waste excluding fresh fish and parts thereof, generated during the normal operation of the vessel and liable to be disposed of continuously or periodically, except sewage originating from vessels;

"Hazardous space" means a space or compartment in which combustible or explosive gases or vapours are liable to accumulate in dangerous concentrations;

"ICAO" means the International Civil Aviation Organisation;

"ICLL" means the International Convention on Load Lines, 1966, as amended;

"IMO" means the International Maritime Organisation, a specialised agency of the United Nations devoted to maritime affairs;

"Inflatable lifejacket" means a lifejacket complying with the requirements of the IMO International Life-Saving Appliances Code;

"Instructions for on-board maintenance" means the instructions complying with the requirements of SOLAS III/Part B - Life Saving Appliances and Arrangements, Regulation 36;

"Jet A1 Fuel" (also known as "Kerosene") means a fuel for modern jet and turboprop engines. It consists primarily of hydrocarbon compounds, but other additives are present to increase safety. International regulations stipulate uniform standards for the quality and composition of kerosene;

"Landing Area" means generic term referring to any area primarily intended for the landing or take-off of aircraft;

"Launching appliance" means a provision complying with the requirements of the IMO International Life-Saving Appliances Code for safely transferring a lifeboat, rescue

boat, or liferaft respectively, from its stowed position to the water and recovery where applicable;

"Length" means 96% of the total length on a waterline of a ship at 85% of the least moulded depth measured from the top of the keel, or the length from the fore-side of the stem to the axis of the rudder stock on that waterline, if that be greater. In ships designed with a rake of keel the waterline on which this is measured shall be parallel to the designed waterline;

"Lifeboat" means a lifeboat complying with the requirements of the IMO International Life-Saving Appliances Code;

"Lifebuoy" means a lifebuoy complying with the requirements of the IMO International Life-Saving Appliances Code;

"Lifejacket" means a lifejacket complying with the requirements of the IMO International Life-Saving Appliances Code;

"Liferaft" means a liferaft complying with the requirements of the IMO International Life-Saving Appliances Code;

"Line throwing appliance" means an appliance complying with the requirements of the IMO International Life-Saving Appliances Code;

"LOS" means the Limited Obstacle Sector. This is the 150° sector within which obstacles may be permitted, provided the height of the obstacles is limited;

"Low flame spread" means that the surface thus described will adequately restrict the spread of flame, this being determined to the satisfaction of a Recognised Organisation in accordance with BMA Information Bulletin No 71 Approval (Certification) of Marine Equipment;

"Machinery spaces" means all machinery spaces of category A and all other spaces containing propelling machinery, boilers, oil fuel units, steam and internal combustion engines, generators and major electrical machinery, oil filling stations, refrigerating, stabilizing, ventilation and air conditioning machinery, and similar spaces, and trunks to such spaces;

"Machinery spaces of category A" means those spaces and trunks to such spaces which contain —

(a) internal combustion machinery used for main propulsion; or

(b) internal combustion machinery used for purposes other than main propulsion where such machinery has in the aggregate a total power output of not less than 375 kW; or

(c) any oil-fired boiler or oil fuel unit;

"Main source of electrical power" means a source intended to supply electrical power to the main switchboard for distribution to all services necessary for maintaining the ship in normal operation and habitable condition;

"Main switchboard" means a switchboard which is directly supplied by the main source of electrical power and is intended to distribute electrical energy to the ship's services;

"Main vertical zone" means those sections into which the hull, superstructure and deckhouses are divided by "A" class divisions, the mean length of which on any deck does not normally exceed 40 metres;

"Maritime & Coastguard Agency" (MCA) means the Maritime & Coastguard Agency, an executive agency of the United Kingdom Department for Transport;

"MARPOL" means the International Convention for the Prevention of Pollution from Ships, 1973, as amended;

"Mile" means a nautical mile of 1852 metres;

"Motor vessel" means a vessel which is described in the register and on the certificate of registry as such, and which has a sole means of propulsion of either one or more power units;

"Multihull vessel" means any vessel which in any normally achievable operating trim or heel angle, has a rigid hull structure which penetrates the surface of the sea over more than one separate or discrete areas;

"New vessel" means a vessel to which this Code applies, the keel of which was laid or the construction or lay up was started on or after the implementation of the BYC;

"Not readily ignitable" means that the surface thus described will not continue to burn for more than 20 seconds after removal of a suitable impinging test flame;

"OFS" means the Obstacle-Free Sector. This is a 210° sector, extending outwards to a distance that will allow for an unobstructed departure path appropriate to the helicopter that the landing area is intended to serve, within which no obstacles above helideck level are permitted;

"Owner(s)/managing agent(s)" means the registered owner(s) or the owner(s) or the managing agent(s) of the registered owner(s) or the owner(s) or owner(s) ipso facto, as the case may be;

"Passenger" means any person carried in a ship except —

(a) a person employed or engaged in any capacity on board the ship on the business of the ship;

(b) a person on board the ship either in pursuance of the obligation laid upon the master to carry ship-wrecked, distressed or other persons, or by reason of any circumstances that neither the master nor the owner nor the charterer (if any) could have prevented; and

(c) a child under one year of age;

"Passenger ship" means a ship carrying more than 12 passengers;

"Position 1" means upon exposed freeboard and raised quarter decks, and upon exposed superstructure decks situated forward of a point located a quarter of the ship's length from the forward perpendicular;

"Position 2" means upon exposed superstructure decks situated abaft a quarter of the ship's length from the forward perpendicular;

"Radar transponder" means a radar transponder for use in survival craft to facilitate location of survival craft in search and rescue operations;

"Recess" means an indentation or depression in a deck and which is surrounded by the deck and has no boundary common with the shell of the vessel;

"Rescue boat" means a boat complying with the requirements of the IMO International Life-Saving Appliances Code and designed to rescue persons in distress and for marshalling liferafts;

"Retro-reflective material" means a material which ref-lects in the opposite direction a beam of light directed on it;

"Rocket parachute flare" means a pyrotechnic signal complying with the requirements of the IMO International Life-Saving Appliances Code;

"Safe haven" means a harbour or shelter of any kind which affords entry, subject to prudence in the weather conditions prevailing, and protection from the force of the weather;

"Sailing vessel" means a vessel designed to carry sail, whether as a sole means of propulsion or as a supplementary means;

"Sail training vessel" means a sailing vessel which, at the time, is being used either —

(a) to provide instruction in the principles of respon sibility, resourcefulness, loyalty and team endeavour and to advance education in the art of seamanship; or

(b) to provide instruction in navigation and seamanship for yachtsmen;

"Self-activating smoke signal" means a signal complying with the requirements of the IMO International Life-Saving Appliances Code;

"Self-igniting light" means a light complying with the requirements of the IMO International Life-Saving Appliances Code;

"Short Range Yacht" means an existing vessel under 500 GT or a new vessel under 300 GT —

(a) restricted to operating in forecast or actual wind of a maximum Beau-fort Force 4; and

(b) within 60 nautical miles of a safe-haven. (The Bahamas Maritime Authority may permit operation on specified routes up to 90 nautical miles from a safehaven as appropriate);

"SLA" means Safe Landing Area for helicopter operations, which is the area bounded by the perimeter line and perimeter lighting. The construction of the OFS and LOS segments (see Annex 6) should ensure that the main rotor will not risk conflict with obstacles when the nose of the helicopter is butted-up to, but not projecting over, the perimeter line. Thus the pilot, when landing in unusual circumstances, has confidence that he can touch down provided that all wheels are within the SLA and the nose

of the helicopter is not projecting over the nearest perimeter line ahead. However, only correct positioning over the aiming circle (see 'Aiming Circle' above) will ensure proper clearance with respect to physical obstacles, provision of ground effect, and provision of adequate passenger access/egress;

"SOLAS" means the International Convention of Safety of Life at Sea, 1974, as amended;

"SOLAS A Pack" means a liferaft emergency pack complying with the requirements of the IMO International Life-Saving Appliances Code;

"SOLAS B Pack" means a liferaft emergency pack complying with the requirements of the IMO International Life-Saving Appliances Code;

"Standard fire test" means a test in which specimens of the relevant bulkheads, decks or other constructions are exposed in a test furnace by a specified test method in accordance with the IMO Fire Test Procedures Code;

"Superstructure" has the meaning given in annex I to ICLL;

"Survival craft" means a craft capable of sustaining the lives of persons in distress from the time of abandoning the ship;

"Trainee" means a person who SHALL —

1. Be engaged for the sole purpose of —

    (a) Obtaining instruction in the principles of responsibility, resourcefulness, loyalty and team endeavour; and/or

    (b) Instruction in navigation and seamanship, marine engineering or other shipboard related skills.

2. Be considered to form part of a 'trainee voyage crew'; and

3. Participate in the operation of the vessel to the best of his or her ability.

A Trainee SHALL NOT —

1. Be part of the crew for the purpose of safe manning or have any safety critical duties;

2. Have any employment contract or any employment relationship with the owner or operator of the vessel;

3. Receive any remuneration for his/her activities on board;

4. Be considered to be a seaman or seafarer; and

5. Be considered as a passenger*.

Note - the fact that a trainee(s) may contribute towards the cost of their welfare whilst on board should not imply that they are passengers.

The minimum age of trainees shall be as determined by The Bahamas Maritime Authority and requirements shall be as indicated in Annex 5, The Bahamas National Annex.

Training organisations wishing to operate training vessels carrying more than 12 trainees shall comply with the requirements of The Bahamas Maritime Authority as indicated in Annex 5, The Bahamas National Annex;

"Training manual" with regard to life-saving appliances means a manual complying with the requirements of SOLAS III/Part B - Life-Saving Appliances and Arrangements, Regulation 35;

"Training Vessel" means a vessel which may be either a sailing or motor vessel, which is operated to pro-vide —

(a) Instruction in the principles of responsibility, resourcefulness, loyalty and team endeavour; and/or

(b) Instruction in navigation and seamanship, marine engineering or other shipboard related skills.

The vessel must be properly and safely manned at all times, both at sea and if necessary in port, by a sufficient number of experienced and competent personnel to ensure that trainees are adequately supervised giving particular consideration to the number, age and sex of the trainees.

All training shall be properly organised with clearly detailed objectives and outcomes;

"Two-way VHF radiotelephone set" means a portable or a fixed VHF installation for survival craft complying with the performance standards adopted by the IMO contained in A.762(18) or any Resolution amending or replacing it which is considered by The Bahamas Maritime Authority to be relevant from time to time;

"Voyage" includes an excursion;

"Watertight" means capable of preventing the passage of water in any direction;

"Weather deck" means the uppermost complete weathertight deck fitted as an integral part of the vessel's structure and which is exposed to the sea and weather;

"Weathertight" has the meaning given in Annex I of ICLL. Weathertight means that in any sea conditions water will not penetrate into the ship;

"Wheelhouse" means the control position occupied by the officer of the watch who is responsible for the safe navigation of the vessel;

"Window" means a ship's window, being any window, regardless of shape, suitable for installation aboard ships.

3. APPLICATION AND INTERPRETATION

3.1 Application

3.1.1 The Code specifically applies to a motor or sailing vessel of 24 metres in load line length and over or, if built before 21 July 1968, which is of 150 tons gross tonnage and over and which, at the time, is in commercial use for sport or pleasure and carries no cargo and no more than 12 passengers. The Code only applies to vessels of less than 3000 GT. Sail training vessels are included in this application.

3.1.2 Any provision of the Code expressed in the conditional (i.e. "should") shall be a requirement.

3.1.3 Area of Operation

In general, requirements given within the Code are based on unrestricted geographical operation however, where considered appropriate, standards for vessels operating as Short Range Yachts have been included.

3.2 Equivalent Standards, Exemptions and Existing Vessels

3.2.1 Equivalent standards

Proposals for the application of alternative standards considered to be at least equivalent to the requirements of the Code should be submitted to The Bahamas Maritime Authority for approval. Equi-valence may be achieved by incorporating increased requirements to

balance deficiencies and thereby achieve the overall safety standard.

3.2.2 Exemptions

Exemptions should be granted only by The Bahamas Maritime Authority.

Applications for exemption should be made to The Bahamas Maritime Authority and be supported by justification for the exemption.

The granting of exemptions will be limited by the extent to which international conventions allow and should be regarded as exceptional.

3.2.3 Existing vessels

3.2.3.1 In the case of an existing Bahamian registered vessel which does not comply fully with the BYC safety standards but for which the BYC standards are reasonable and practicable, The Bahamas Maritime Authority will consider proposals from the owner(s) or managing agent(s) to agree a level of equivalence within an agreed time scale not exceeding 18 months.

3.2.3.2 When an existing Bahamian registered vessel does not meet the BYC safety standard for a particular feature and it can be demonstrated that compliance is neither reasonable nor practicable, proposals for alternative arrangements should be submitted to The Bahamas Maritime Authority for approval. In considering individual cases, The Bahamas Maritime Authority should take into account the vessel's service history and any other factors which are judged to be relevant to the safety standard which can be achieved.

3.2.3.3 Generally, repairs, alterations and refurbishments should comply with the standards applicable to a new vessel.

3.3 Interpretation

Where a question of interpretation of any part of this Code arises which cannot be resolved by a delegated authority and the owner(s)/managing agent(s) for a vessel, a decision on the interpretation may be obtained on written application to The Bahamas Maritime Authority.

3.4 Updating the Code

The requirements of the Code will be reviewed and, if necessary revised, by The Bahamas Maritime Authority.

3.5 Vessels Coded under "The Code of Practice for Safety of Large Commercial Sailing and Motor Vessels" (LY1) or similar Codes

Vessels coded under The Code of Practice for Safety of Large Commercial Sailing and Motor Vessels ("LY1") issued by the UK MCA, or similar Codes, may continue to be considered under the standards in force at the time of initial certification. However, for vessels less than 500 GT, compliance with section 30.2 (Safety Management) should be in place.

4. CONSTRUCTION AND STRENGTH

Objective: The purpose of this section is to ensure that all vessels are constructed to a consistent standard in respect of strength and watertight integrity. New vessels are to be built to the requirements of one of the Recognised Organisations listed in The Bahamas National Annex and issued with a Class Certificate. Existing vessels which are not already Classed should be taken into Class, however for vessels under 500 GT alternative arrangements for Short Range operation may be agreed by The Bahamas Maritime Authority. The extent of the watertight bulkheads defined in section 4.3, is to ensure that sufficient buoyancy is maintained by the vessel to meet the damaged stability requirements of section 11.

4.1 General Requirements

4.1.1 All vessels should have a freeboard deck.

4.1.2 All vessels should be fitted with a weather deck throughout the length of the vessel and be of adequate strength to withstand the sea and weather conditions likely to be encountered in the declared area(s) of operation.

4.1.3 The declared area(s) of operation and any other conditions which restrict the use of the vessel at sea should be recorded on the load line certificate issued to the vessel.

4.1.4 The choice of hull construction material affects fire protection requirements, for which reference should be made to section 14.

4.2 Structural Strength

4.2.1 For unlimited operation, all vessels must be Classed.

4.2.2 For operation within the Short Range Yacht category, all new vessels must be Classed by a Recognised Organisation.

4.2.3 Existing un-Classed vessels of less than 500 GT may be considered for restricted operation within the Short Range Yacht category.

4.2.4 Attention should be paid to local or global hull strength requirements for the provision of ballast.

4.3 Watertight Bulkheads

Section 11 of the Code deals with subdivision and damage stability requirements which will determine the number and positioning of watertight bulkheads defined below.

4.3.1 Watertight bulkheads should be fitted in accordance with the following requirements —

.1 The strength of watertight bulkheads and their penetrations, and watertight integrity of the division should be in accordance with the requirements of one of the Recognised Organisations referred to in the Annex 5, The Bahamas National Annex.

.2 Generally, openings in watertight bulkheads should comply with the standards required for passenger vessels, as defined in SOLAS regulations II-1.

.3 Approved hinged doors may be provided for infrequently used openings in watertight compartments, where a crew member will be in immediate attendance when the door is open at sea. Audible & visual alarms should be provided in the wheelhouse.

.4 Unless otherwise required by section 4.4, watertight doors in yachts under 500GT may be approved hinged doors provided that there is an audible and visual alarm on the Bridge indicating when the door is open. The doors are to be kept

closed at sea and marked accordingly. A time delay for the alarm is acceptable.

.5 Procedures for the operation of watertight doors should be agreed with the Recognised Organisation or The Bahamas Maritime Authority and posted in suitable locations. Watertight doors should be normally closed, with the exception of sliding watertight doors providing the normal access to frequently used living and working spaces. Additionally when an access is unlikely to be used for lengthy periods, the door should also be closed. All watertight doors should be operationally tested before a ship sails and at least once a week.

4.4 Enclosed Compartments within the Hull and below the Freeboard Deck provided with Access through Openings in the Hull

4.4.1 Compartment(s) below the freeboard deck, provided for recreational purposes, oil fuel-ling/fresh water reception or other purposes to do with the business of the vessel and having access openings in the hull, should be bounded by watertight divisions without any opening (i.e. doors, manholes, ventilation ducts or any other opening separating the compartment(s) from any other compartment below the freeboard deck, unless provided with sliding watertight doors complying with section 4.3.1, or for vessels under 500 GT, hinged doors complying with section 4.4.2.

4.4.2 For vessels less than 500 GT, openings from any other compartment below the freeboard deck may be fitted with hinged watertight doors provided —

.1 after flooding through the shell opening of the space containing the shell opening, the resultant waterline is below the sills of the internal openings in that space, or

.2 a bilge alarms are fitted in the compartment containing the shell opening, with a visual and audible warning on the bridge; and

b any hinged door opens into the compartment containing the shell opening; and

c "open" door alarms, both visual and audible fitted on the bridge; and

d the door is to be fitted with a single closing mechanism; and

e sill height of the internal door should be higher above the design waterline than the sill height of the shell opening.

4.4.3 Openings in the hull should comply with SOLAS regulation II-1/25-10 -External openings in cargo ships. Provision should be made to ensure that doors may be manually closed and locked in the event of power or hydraulic failure.

4.5 Rigging on Sailing Vessels

4.5.1 General

The condition of the rig should be monitored in accordance with a planned maintenance schedule. The schedule should include, in particular, regular monitoring of all the gear associated with safe work aloft and on the bowsprit (see section 22.3).

4.5.2 Masts and spars

4.5.2.1 Dimensions and construction materials of masts and spars should be in accordance with the requirements or recommendations of one of the Recognised Organisations referred to in section 4.3.1.1 or a recognised national or international standard.

4.5.2.2 The associated structure for masts and spars (including fittings, decks and floors) should be constructed to effectively carry and transmit the forces involved.

4.5.3 Running and standing rigging

4.5.3.1 Wire rope used for standing rigging (stays or shrouds) should not be flexible wire rope (fibre rope core).

4.5.3.2 The strength of all blocks, shackles, rigging screws, cleats and associated fittings and attachment points should exceed the breaking strain of the associated running or standing rigging.

4.5.3.3 Chainplates for standing rigging should be constructed to effectively carry and transmit the forces involved.

4.5.4 Sails

4.5.4.1 Adequate means of reefing or shortening sail should be provided.

4.5.4.2 Sailing vessels operating as Short Range Yachts need not carry storm canvas.

4.5.4.3 All other vessels should either be provided with separate storm sails or have specific sails designated and constructed to act as storm canvas.

5. WEATHERTIGHT INTEGRITY

Objective: This section is intended to outline standards to be achieved for weathertight integrity. As far as is practicable the standards of the 1966 ICLL are to be adhered to. However, due consideration may be given to arrangements that provide an equivalent level of safety in respect of the risks of down flooding and green sea loading.

Virtual Freeboard Deck

For the purposes of this section only, where actual freeboard to the weather deck exceeds that required by ICLL 66 by at least one standard superstructure height, openings on that deck, abaft of the forward quarter, may be assumed to be in position 2. This is to be taken, unless otherwise stated, as defined in ICLL 66.

For vessels up to 75m load line length, a standard superstructure height is to be taken as 1.8m. For vessels over 125m load line length, this is to be taken as 2.3m. Superstructure heights for vessels of intermediate lengths should be obtained by interpolation.

5.1 Hatchways and Skylight Hatches

5.1.1 General requirements

5.1.1.1 All openings leading to spaces below the weather deck not capable of being closed weathertight must be enclosed within either an enclosed superstructure or a weathertight deckhouse of adequate strength meeting with the requirements of the Load Line assigning authority.

5.1.1.2 All exposed hatchways which give access from position 1 and position 2 are to be of substantial

weathertight construction and provided with efficient means of closure. Weathertight hatch covers should be permanently attached to the vessel and provided with adequate arrangements for securing the hatch closed.

5.1.1.3 Hatches which are designated for escape purposes should be provided with covers which are to be openable from either side and in the direction of escape they are to be openable without a key. All handles on the inside are to be non-removable. An escape hatch should be readily identified and easy and safe to use, having due regard to its position.

5.1.2 Hatchways which are open at sea

In general, hatches should be kept closed at sea. However, hatchways which may be kept open for access at sea are to be as small as practicable (a maximum of 1 square metre in clear area), and fitted with coamings of at least 300 mm in height in positions 1 and 2. Hatchways should be as near to the centreline as practicable, especially on sailing vessels. Covers of hatchways are to be permanently attached to the hatch coamings and, where hinged, the hinges are to be located on the forward side.

5.2 Doorways and Companionways

5.2.1 Doorways located above the weather deck

5.2.1.1 External doors in deckhouses and superstructures that give access to spaces below the weather deck are to be weathertight and door openings should have coaming heights of at least:

Location	Unrestricted Yachts	Short Range Yachts
A	600mm	300 mm
B	300 mm	150 mm
C	150 mm	75 mm

Location A The door is in the forward quarter length of the vessel and is used when the vessel is at sea.

Location B The door is in an exposed forward facing location aft of the forward quarter length.

Location C The door is in a protected location aft of the forward quarter length, or an unprotected door on the first tier deck above the weather deck.

5.2.1.2 Weathertight doors should be arranged to open outwards and when located in a house side, be hinged at the forward edge. Alternative closing arrangements will be considered providing it can be demonstrated that the efficiency of the closing arrangements and their ability to prevent the ingress of water will not impair the safety of the vessel.

5.2.1.3 An access door leading directly to the engine room from the weather deck should be fitted with a coaming of height of at least:

Location	Unrestricted Yachts	Short Range Yachts
Position 1	600 mm	450 mm
Position 2	380 mm	200 mm

5.2.1.4 Coaming height, construction and securing standards for weathertight doors which are provided for use only when the vessel is in port or at anchor in calm sheltered waters and are locked closed when the vessel is at sea, may be considered individually.

5.2.2 Companion hatch openings

5.2.2.1 Companionway hatch openings which give access to spaces below the weather deck should be fitted with a coaming, the top of which is at least 300mm above the deck, or 150 mm in the case of Short Range Yachts.

5.2.2.2 Washboards may be used to close the vertical opening. When washboards are used, they should be so arranged and fitted that they will not be dislodged readily. Whilst stowed, provisions are to be made to ensure that they are retained in a secure location.

5.2.2.3 The maximum breadth of an opening in a com-panion hatch should not exceed 1 metre.

5.3 Skylights

5.3.1 All skylights should be of efficient weathertight construction and should be located on or as near to the centreline of the vessel as practicable.

5.3.2 If they are of the opening type they should be provided with efficient means whereby they can be secured in the closed position.

5.3.3 Skylights which are designated for escape purposes should be openable from either side and in the direction of escape they are to be openable without a

key. All handles on the inside are to be non-removable. An escape skylight should be readily identified and easy and safe to use, having due regard to its position.

5.3.4 The skylight glazing material and its method of securing within the frame should meet an appropriate national or international standard. Recognised Organisation rules for "ships" are considered to meet these requirements. Where a Recognised Organisation produces alternative rules for "pleasure vessels" or "yachts", these are considered appropriate for Short Range Yachts.

A minimum of one portable cover for each size of glazed opening should be provided which can be accessed rapidly and efficiently secured in the event of a breakage of the skylight.

5.4 Portlights

5.4.1 Portlights should be of strength appropriate to location in the vessel and meet an appropriate national or international standard. Recognised Organisation rules for "ships" are considered to meet these requirements. Where a Recognised Organisation produces alternative rules for "pleasure vessels" or "yachts", these are considered appropriate for Short Range Yachts. With regard to structural fire protection, the requirements for the construction of certain portlights should meet the requirements of section 14.

5.4.2 In general, all portlights fitted in locations protecting openings to spaces below the weather deck or fitted in the hull of the vessel should be provided with a permanently attached deadlight which is to be capable of securing the opening watertight in the event of a breakage of the portlight glazing. Proposals to fit portable dead-lights will be subject to special consideration and approval by The Bahamas Maritime Authority, having regard for the location of the portlights and the ready availability of deadlights. Consideration should be given to the provision of operational instructions to the Master as to when deadlights must be applied to portlights.

5.4.3 Portlights fitted in the hull of the vessel below the level of the freeboard deck should be either non-opening or of a non-readily openable type and be in accordance with a standard recognised by The

Bahamas Maritime Authority as specified in Bulletin No 71. The lower edge of the portlights should be at least 500 mm or 2.5% of the breadth of the vessel, whichever is the greater, above the all seasons load line assigned to the vessel. Portlights of the non-readily opening type must be secured closed when the vessel is in navigation and indication provided on the bridge that they are closed.

5.4.4 Portlights should not be fitted in the hull in way of the machinery space.

5.5 Windows

5.5.1 Windows should be of strength appropriate to their location in the vessel and meet the requirements of ISO TC 8/SC 8 or an equivalent international standard. Recognised Organisation(s) rules for "ships" are considered to meet these requirements. Where a Recognised Organisation produces alternative rules for "pleasure vessels" or "yachts", these are considered appropriate for Short Range Yachts. With regard to structural fire protection, the requirements for the construction of certain windows should meet the requirements of sections 14A and 14B.

5.5.2 For all vessels where the glazing material, glazing thickness, or fixing of the windows does not meet the requirements of a recognised standard, windows may be tested, to the satisfaction of The Bahamas Maritime Authority or a Recognised Organisation, at a minimum of 4 times the required design pressure derived from an appropriate national or international standard. Additionally, as a minimum, any calculated thickness should meet Recognised Organisation requirements for pleasure vessels or yachts. For windows fitted with storm shutters (see section 5.5.6) or for Short Range Yachts, test pressures may be reduced to 2.5 times the derived design pressure.

5.5.3 When using ISO TC 8/SC 8 or equivalent, the following alternative minimum design heads may be assumed for use in association with the standard's design head pressure determination formulation.

First tier unprotected fronts	4.5 + L/100 metres
Second tier unprotected fronts	3.5 metres
Elsewhere	1.5 metres

5.5.4 In general, windows fitted in superstructures or weathertight deckhouses are to be substantially framed

and efficiently secured to the structure. The glass is to be of the toughened safety glass type.

5.5.5 Where chemically toughened safety glass is used, windows are to be of the laminated type, the minimum depth of chemical toughening to be 30 microns on exposed faces. Regular inspections of the windows, with particular reference to the surface condition, should form part of the operational procedures and annual Recognised Organisation survey.

5.5.6 In general, windows should not be fitted in the main hull below the level of the freeboard deck. Proposals to fit windows in the main hull below the level of the freeboard deck will be subject to special consideration and approval by The Baha-mas Maritime Authority, having regard for the location and strength of the windows and their supporting structure and, the availability of strong protective covers for the windows. One item of the special consideration should be operational instructions to the Master as to when the strong protective covers must be applied to windows.

5.5.7 For all vessels, other than Short Range Yachts, storm shutters are required for all windows in the front and sides of first tier and front windows of the second tier of superstructures or weathertight deckhouses above the freeboard deck. Where windows are of laminated construction and their equivalent toughened safety glass thickness exceeds the requirements of the applied standard by a minimum of 30%, storm shutters need not be carried, but a blanking plate(s) is to be provided so that any window opening may be sealed in the event of glass failure. When storm shutters are interchangeable port and starboard, a minimum of 50% of each size should be provided.

5.5.8 Side and front windows to the navigating position should not be constructed of polarised or tinted glass (see section 18).

5.6 Ventilators and Exhausts

5.6.1 Adequate ventilation is to be provided throughout the vessel. The accommodation is to be protected from the entry of gas and/or vapour fumes from machinery, exhaust and fuel systems.

5.6.2 Ventilators are to be of efficient construction and provided with permanently attached means of weathertight closure. Generally, ventilators serving any space below the freeboard deck or an enclosed superstructure should have a coaming of minimum height of:

Location	Unrestricted Yachts	Short Range Yachts
Forward quarter length	900 mm	450 mm
Elsewhere	760 mm	380 mm

5.6.3 Ventilators should be kept as far inboard as practicable and the height above the deck of the ventilator opening should be sufficient to prevent the ingress of water when the vessel heels.

5.6.4 The ventilation of spaces such as the machinery space, which must remain open, requires special attention with regard to the location and height of the ventilation openings above the deck, taking into account the effect of downflooding angle on stability standard (see section 11).

The means of closure of ventilators serving the machinery space should be selected with regard to the fire protection and extinguishing arrangements provided in the machinery space.

5.6.5 Engine exhaust outlets which penetrate the hull below the freeboard deck should be provided with means to prevent back flooding into the hull through a damaged exhaust system. For vessels operating on unrestricted service a positive means of closure should be provided. The system should be of equivalent construction to the hull on the out-board side of the closure. For Short Range Yachts, where the fitting of a positive closure is not practicable, the exhaust should be looped up above the waterline on the outboard side of the system, to a minimum height of 1000 mm, and be of equivalent construction to the hull.

5.7 Air Pipes

5.7.1 Air pipes serving fuel and other tanks should be of efficient construction and provided with permanently attached means of weathertight closure. Means of closure may be omitted if it can be shown that the open end of an air pipe is afforded adequate protection by other structure(s) which will prevent the ingress of water.

5.7.2 Where located on the weather deck, air pipes should be kept as far inboard as practicable and be fitted with a coaming of sufficient height to prevent inadvertent flooding. Generally, air pipes to tanks should have a minimum coaming height of:

Location	Unrestricted yachts	Short Range Yachts
On weather deck	760 mm	380 mm
Elsewhere	450 mm	225 mm

5.7.3 Air pipes to fuel tanks should terminate at a height of not less than 760 mm above either, the top of the filler pipe for a gravity filling tank or, the top of the overflow tank for a pressure filling tank.

5.8 Scuppers, Sea Inlets and Discharges

The standards of ICLL 1966 should be applied to every discharge led through the shell of the vessel as far as it is reasonable and practicable to do so, and in any case, all sea inlet and overboard discharges should be provided with efficient shut-off valves arranged in positions where they are readily accessible at all times.

5.9 Materials for Valves and Associated Piping

5.9.1 Valves which are fitted below the waterline should be of steel, bronze or other material having a similar resistance to impact fire and corrosion. Non-metallic valves will not normally be considered equivalent.

5.9.2 The associated piping should, in areas as indicated above, be of steel, bronze, copper or other equivalent material. Non-metallic pipework will not normally be considered equivalent.

5.9.3 Where the use of plastic piping is proposed, it will be considered and full details of the type of piping, its intended location, and use, should be submitted for approval; with regard to watertight integrity, any plastic piping should be above the waterline. Due

regard should be paid to the IMO Fire Test Procedures Code.

5.9.4 The use of flexible piping in any location should be kept to a minimum compatible with the essential reason for its use. Flexible piping and the means of joining it to its associated hard piping system should be approved as fit for the purpose.

5.10 General Equivalence

Where vessels cannot fully comply with the requirements of this section, equivalent arrangements may be considered by The Bahamas Maritime Authority. Such proposals should take into account the follow-ing, although this should not be considered as an exhaustive list —

- Openings to be kept closed at sea;
- Enhanced Bilge Pumping capacity and additional bilge alarms;
- Compliance with damage stability if not already a requirement (see section 11);
- Provision of dorade boxes or baffle systems to prevent direct ingress of water;
- Alternative ventilation for use in bad weather;
- Consideration of downflooding angle and reduced risk of green sea loads, i.e. protected position;
- Enhanced survey inspection regime;
- Operational Limitations.

6. WATER FREEING ARRANGEMENTS

Objective: This section provides for consideration of the risks of green water being shipped aboard and the resulting consequences with respect to the vessels stability and safety of personnel on deck.

6.1 The standards for water freeing arrangements should comply with ICLL as far as it is reasonable and practicable to do so.

In any case the intention should be to achieve a standard of safety which is at least equivalent to the standard of ICLL

Additionally, where a well is created on each side of the vessel between a superstructure or deck-house, and the bulwark in way of that superstructure or deck house, the following formula may be used to determine the required freeing port areas on each side of the vessel for the well concerned;

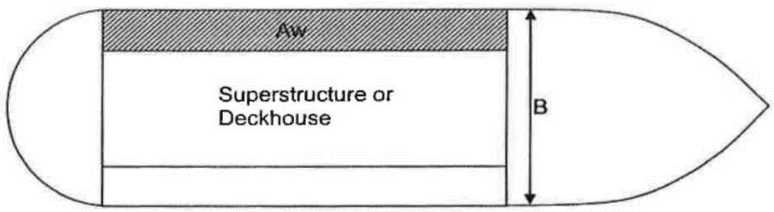

$FP_{REQ} = 0.28 \times A_w / B$

Where;

FP_{REQ} = Freeing port area required

A_w = Area of well in way of superstructure or deckhouse

B = Full beam at deck,

On sailing vessels, where the solid bulwark height does not exceed 150mm, specific freeing ports, as defined above, are not required.

6.2 In individual cases, when The Bahamas Maritime Authority considers that the requirements of ICLL cannot be met, The Bahamas Maritime Authority may consider and approve alternative arrange-ments to achieve adequate safety standards. Freeing arrangements may take account of a redu-ced permeability and volume of the well, when compared to a full size well.

For Short Range Yachts it is considered that the requirement for freeing port area for a forward or after well may be reduced by a form factor equal to the ratio of (actual area well) divided by (length of well x breadth of well). Dimensions should be taken at half height of the bulwark. This may be reduced by 50% providing it can be shown that the intact stability of the yacht remains acceptable if the well is flooded to any level up to the bulwark height and that area

provided will allow the well to drain in less than 3 minutes.

In considering an individual case, The Bahamas Maritime Authority will take into account the vessels past performance in service and the declared area(s) of operation and any other conditions which restrict the use of the vessel at sea which will be recorded on the load line certificate issued to the vessel (see section 4.1).

6.3 Recesses

6.3.1 Any recess in the weather deck should be of weathertight construction and should be self draining under all normal conditions of heel and trim of the vessel.

A swimming pool or spa bath open to the elements should be treated as a recess.

6.3.2 The means of drainage provided should be capable of efficient operation when the vessel is heeled to an angle of 10° in the case of a motor vessel (see section 10A.2), and 30° in the case of a sailing vessel.

The drainage arrangements should have the capability of draining the recess (when fully charged with water) within 3 minutes when the vessel is upright and at the load line draught. Means should be provided to prevent the backflow of sea water into the recess.

6.3.3 When it is not practical to provide drainage which meets the requirements of section 6.3.2, alter-native safety measures may be proposed for approval by The Bahamas Maritime Authority. Where the above requirements for quick drainage cannot be met, the effect on intact and damage stability should be considered taking into account the mass of water and its free surface effect.

7A MACHINERY – VESSELS OF LESS THAN 500GT

Objective: This section outlines the minimum requirements for Machinery Classification, which are to be in accordance with the requirements of one of the Recognised Organisations defined in The Bahamas National Annex and should cover the minimum aspects defined below, even if the machinery is not considered the primary means of propulsion. Existing vessels which are not already Classed should be taken into Class, however alternative arrangements for Short Range operation may be agreed by The Bahamas Maritime Authority.

7A.1 General Requirements

7A.1.1 The machinery and its installation should, in general, meet with the requirements of one of the Recognised Organisations named in The Bahamas National Annex or as amended by a subsequent Bulletin No. 3. The Class Survey or Notation should include as a minimum, propulsion and electrical generation machinery and shafting. For existing and new vessels which operate with periodically unattended machinery spaces, the machinery and its installation should meet the standards of SOLAS regulations II-1/Part E - Additional requirements for periodically unattended machinery spaces, so far as is reasonable and practicable to do so.

Plastic piping may be accepted where the piping and the arrangements for its use meet the requirements of the IMO Fire Test Procedures Code.

7A.1.2 The requirements for main propulsion are based upon the installation of diesel powered units. When other types of main propulsion are proposed, the arrangements and installation should be specially considered. Where gas turbines are to be fitted, attention should be paid to the guidance contained within the IMO High-speed Craft Code, and installation is to be to the satisfaction of The Bahamas Maritime Authority.

7A.1.3 Notwithstanding the requirements of section 7A. 1.1, in a fuel supply system to an engine unit, where a flexible section of piping is provided, connections should be of a screw type or equivalent approved type. Flexible pipes should be fire resistant/metal reinforced. Materials and fittings should be of a suitable recognised national or international standard.

7A.2 Installation

7A.2.1 Notwithstanding the requirements referred to in section 7A.1, the machinery fuel tanks and associated piping systems and fittings should be of a design and construction adequate for the service for which they are intended, and should be so installed and protected as to reduce to a minimum any danger to persons during normal movement about the vessel, with due regard being made to moving parts, hot surfaces, and other hazards.

7A.2.2 Means should be provided to isolate any source of fuel which may feed a fire in an engine space fire situation. A fuel shut-off valve(s) should be pro-vided which is capable of being closed from a position outside the engine space. The valve(s) should be fitted as close as possible to the fuel tank(s).

7A.2.3 All external high pressure fuel delivery lines between the high pressure fuel pumps and fuel nozzles should be protected with a jacketed tubing system capable of containing fuel resulting from a high-pressure line failure. The jacketed tubing system should include means for collection of leakage and arrangements should be provided for an alarm to be given in the event of a fuel line failure.

7A.2.4 When a glass fuel level gauge is fitted it should be of the “flat glass” type with self-closing valves between the gauge and the tank.

7B MACHINERY - VESSELS OF 500 GT AND OVER

Objective: This section outlines the minimum requirements for Machinery Classification, which are to be in accordance with the requirements of one of the Recognised Organisations defined in The Bahamas National Annex. The Class Notation should cover the minimum aspects defined within this section even if the machinery is not considered the primary means of propulsion.

7B.1 For existing and new vessels the machinery and its installation should meet the standards of SOLAS regulations II-1/Part C Machinery installations and II-1/Part E - Additional requirements for periodically unattended machinery spaces, so fares is reasonable and practicable to do so.

7B.2 In any case the intention should be to achieve a standard of safety which is at least equivalent to the standard of SOLAS. Equivalence may be achieved by incorporating increased requirements to balance deficiencies and thereby achieve the required overall standard.

7B.3 Where gas turbines are to be fitted, attention should be paid to the guidance contained within the IMO High-speed Craft Code, and installation is to be to the satisfaction of The Bahamas Maritime Authority.

8A ELECTRICAL INSTALLATIONS - VESSELS OF LESS THAN 500 GT

Objective: This section outlines the minimum requirements for Electrical Classification, which are to be in accordance with the requirements of one of the Recognised Organisations defined in The Bahamas National Annex, and should cover the minimum aspects defined below. For sailing vessels, this should also cover the elements necessary to ensure safety of the vessel including control of the sails, where appropriate. Existing vessels which are not already Classed should be taken into Class, however alternative arrangements for Short Range operation may be agreed by The Bahamas Maritime Authority.

8A.1 Installation

8A.1.1 Particular attention should be paid to the provision of overload and short circuit protection of all circuits, except engine starting circuits supplied from batteries.

8A.1.2 Electrical devices working in potentially hazardous areas, into which petroleum vapour or other hydrocarbon gas may leak, should be of a type certified safe for the hazard.

8A.2 Lighting

8A.2.1 Lighting circuits, including those for emergency lighting, should be distributed through the spaces so that a total blackout cannot occur due to failure of a single protective device.

8A.2.2 An emergency source of lighting should be provided which should be independent of the general lighting system. This source should be sufficient for up to 3 hours duration and should include navigation light supplies. The lighting is to provide sufficient lighting for personnel to escape from the accommodation or working spaces to their muster station, and launch and board survival craft. Additionally, this light, supplemented by torches, should be sufficient to permit emergency repairs to machinery, etc. The emergency source of power should be independent of the main power supply, external to the engine room, and with separate distribution.

8A.3 Batteries

Batteries of a type suitable for marine use and not liable to leakage should be used. Areas in which batteries are stowed should be provided with adequate ventilation to prevent an accumulation of gas which is emitted from batteries of all types. Reference should also be made to section 14.1.5.

8B ELECTRICAL INSTALLATIONS - VESSELS OF 500 GT AND OVER

Objective: This section outlines the minimum requirements for Electrical Classification, which are to be in accordance with the requirements of one of the Recognised Organisations defined in The Bahamas National Annex, and should cover the minimum aspects defined below. For sailing vessels, this should also cover the elements necessary to ensure safety of the vessel including control of the sails, where appropriate.

8B1 The electrical equipment and its installation should meet the standards of SOLAS regulations II-1/Part D - Electrical installations and II-1/Part E -Additional requirements for periodically unattended machinery spaces, where appropriate, so far as it is reasonable and practicable to do so.

8B2 The emergency generator, if fitted, should be located above the uppermost continuous deck but may be located below this deck provided it is protected from the effects of fire and flooding. In all cases, the emergency generator should be separated from main generators and main switch-board by a division capable of ensuring its continued operation. The emergency generator should be readily accessible from the open deck.

9A STEERING GEAR - VESSELS OF LESS THAN 500 GT

Objective: This section outlines the minimum requirements for Steering Gear Classification, which are to be in accordance with the requirements of a Recognised Organisation. The Class Notation or Survey should cover the minimum aspects defined within this section. Due regard is to be paid to the requirements for emergency steering.

9A.1 General Requirements

The steering gear and its installation should, in general, meet with the requirements of one of the Recognised Organisations.

In the event that the above requirements cannot be met on an existing vessel, The Bahamas Maritime Authority may be requested to consider and approve alternative arrangements to achieve adequate safety standards.

9A.2 Vessels should be provided with means for directional control of adequate strength and suitable design to enable the heading and direction of travel to be effectively controlled at all opera-ting speeds. When appropriate to the safe steering of the vessel, the steering gear should be power operated in accordance with the requirements of The Bahamas Maritime Authority.

9A.3 When the steering gear is fitted with remote control, arrangements should be made for emergency steering in the event of a failure of such control

9B STEERING GEAR - VESSELS OF 500 GT AND OVER

Objective: This section outlines the minimum requirements for Steering Gear Classification, which are to be in accordance with the requirements of a Recognised Organisation. The Class Notation should cover the minimum aspects defined within this section. Due regard is to be paid to the requirements for emergency steering.

For existing and new vessels, the steering gear and its installation should meet the standards of SOLAS

regulations II-1/Part C - Machinery installations, so far as it is reasonable and practicable to do so.

In any case, the intention should be to achieve a standard of safety which is at least equivalent to the standard of SOLAS. Equivalence may be achieved by incorporating increased requirements to balance deficiencies and thereby achieve the required overall standard.

10A BILGE PUMPING - VESSELS OF LESS THAN 500 GT

Objective: This section outlines the minimum requirements for Bilge Pumping Classification, which are to be in accordance with the requirements of a Recognised Organisation. The Class Notation should cover the minimum aspects defined within this section. The principle objective of this section is that in the event of one compartment being flooded, which may or may not be the engine room, there is an ability to control any leakage to adjacent compartments.

10A.1 General Requirements

The bilge pumping equipment and its installation should, in general, meet the requirements of a Recognised Organisation. Either the vessel should be in Class or a statement of compliance issued by one of the Societies should be provided to The Bahamas Maritime Authority.

In the event that the above requirements cannot be met on an existing vessel, The Bahamas Maritime Authority may be requested to consider alternative arrangements to achieve adequate safety standards.

10A.2 All vessels should be provided with at least two fixed and independently powered pumps, with suction pipes so arranged that any compartment can be effectively drained when the vessel is heeled to an angle of 10°. For Short Range Yachts, the second pump and suction pipes may be portable.

10A.3 The location of pumps, their individual power supplies and controls, including those for bilge valves, should be such that in event of any one compartment being flooded another pump is available to control any leakage to adjacent compartments.

10A.4 Each bilge pump suction line should be fitted with an efficient strum box.

10A.5 In the case of a vessel where the propulsion machinery space may be unmanned at any time, a bilge level alarm should be fitted. The alarm should provide an audible and visual warning in the Master's cabin and in the wheelhouse. The audible and visual alarm may be accepted elsewhere if it is considered that such a location may be more appropriate.

10A.6 Pumping and piping arrangements for bilges into which fuel or other oils of similar or higher fire risk could collect, under either normal or fault conditions, should be kept clear of accommodation spaces and separate from accommodation bilge systems. Bilge level alarms meeting the requirements of section 10A.5 should be fitted to all such bilges.

10B BILGE PUMPING - VESSELS OF 500 GT AND OVER

Objective: This section outlines the minimum requirements for Bilge Pumping Classification, which are to be in accordance with the requirements of one of the Recognised Organisations defined in section 3. The Class Notation should cover the minimum aspects defined within this section. The principle objective of this section is that in the event of one compartment being flooded, which may or may not be the engine room, there is an ability to control any leakage to adjacent compartments.

For all vessels, the bilge pumping and its installation should as a minimum meet the cargo vessel standards of SOLAS regulations II-1/Part B -Subdivision and stability Regulation 21.

In any case, the intention should be to achieve a standard of safety which is at least equivalent to the standard of SOLAS. Equivalence may be achieved by incorporating increased requirements to balance deficiencies and thereby achieve the required overall standard.

A minimum of 2 pumps should be provided. The capacity of the pumps and the size of the bilge main and branches should meet the capacity requirements for passenger ships contained in SOLAS.

In addition the minimum requirements for vessels of less than 500 GT contained at section 10A, should also be met.

11 STABILITY

Objective: This section outlines the minimum requirements for Intact and Damage stability for both Motor and Sailing Vessels. For vessels less than 85m Load Line length, a minor damage methodology is adopted in which damage is assumed not to occur on any bulkhead, deck, or other watertight boundary.

11.1 General

11.1.1 This section deals with the standards for both intact and damaged stability.

11.1.2 An intact stability standard proposed for assessment of a vessel type not covered by the standards defined in the Code should be submitted to a Recognised Organisation of The Bahamas Maritime Authority for approval at the earliest opportunity.

11.1.3 If used, permanent ballast should be located in accordance with a plan approved by The Bahamas Maritime Authority and in a manner that prevents shifting of position. Permanent ballast should not be removed from the yacht or relocated within the yacht without the approval of The Bahamas Maritime Authority. Permanent ballast particulars should be noted in the yacht's stability booklet. Attention should be paid to local or global hull strength requirements from the fitting of additional ballast.

11.2 Intact Stability Standards

11.2.1 Motor Vessels

11.2.1.1 Monohull Vessels

The curves of statical stability for seagoing conditions should meet the following criteria:

.1 the area under the righting lever curve (GZ curve) should not be less than 0.055 metre-radians up to 30° angle of heel and not less than 0.09 metre-radians up to 40° angle of heel, or the angle of downflooding, if this angle is less;

.2 the area under the GZ curve between the angles of heel of 30° and 40° or between 30° and the angle of downflooding if this is less than 40°, should not be less than 0.03 metre-radians;

.3 the righting lever (GZ) should be at least 0.20 metres at an angle of heel equal to or greater than 30°;

.4 the maximum GZ should occur at an angle of heel of preferably exceeding 30° but not less than 25°;

.5 after correction for free surface effects, the initial metacentric height (GM) should not be less than 0.15 metres; and

.6 In the event that the vessels intact stability standard fails to comply with the criteria defined in .1 to .5, The Bahamas Maritime Authority may be consulted for the purpose of specifying alternative but equivalent criteria.

11.2.1.2 Monohull Vessels operating as Short Range Yachts

Where Short Range Yachts are unable to meet the criteria above, the following criteria may be used:

.1 the area under the righting lever curve (GZ curve) should not be less than 0.07 metre-radians up to 15° angle of heel, when maximum GZ occurs at 15°, and 0.055 metre-radians up to 30° angle of heel, when maximum GZ occurs at 30° or above. Where the maximum GZ occurs at angles of between 15° and 30°, the corresponding area under the GZ curve, A_{req}, should be taken as follows:

$$A_{req} = 0.055 + 0.001\ (30° - \theta_{max})\ \text{metre-radians}$$

where 0_{max} is the angle of heel in degrees where the GZ curve reaches its maximum;

.2 the area under the GZ curve between the angles of heel of 30° and 40° or between 30° and the angle of downflooding if this is less than 40°, should not be less than 0.03 metre-radians;

.3 the righting lever (GZ) should be at least 0.20 metres at an angle of heel equal to or greater than 30°;

.4 the maximum GZ should occur at an angle of heel not Jess than 15°;

.5 after correction for free surface effects, the initial metacentric height (GM) should not be less than 0.15 metres.

11.2.1.3 Multi-hulls

The curves of statical stability for seagoing conditions should meet the following criteria:

.1 the area under the righting lever curve (GZ curve) should not be less than 0.075 metre-radians up to an angle of 20° when the maximum righting lever (GZ) occurs at 20° and, not less than 0.055 metre-radians up to an angle of 30° when the maximum righting lever (GZ) occurs at 30° or above. When the maximum GZ occurs at angles between 20° and 30° the corresponding area under the GZ curve, Areq should be taken as follows:

$A_{req} = (0.055 + 0.002(30 – \theta_{max})$ metre- radians;

where θ_{max} is the angle of heel in degrees where the GZ curve reaches its maximum.

.2 the area under the GZ curve between the angles of heel of 30° and 40° or between 30° and the angle of downflooding if this is less than 40°, should not be less than 0.03 metre-radians;

.3 the righting lever (GZ) should be at least 0.20 metres at an angle of heel where it reaches its maximum:

.4 the maximum GZ should occur at an angle of heel not less than 20°;

.5 after correction for free surface effects, the initial metacentric height (GM) should not be less than 0.15 metres; and

.6 if the maximum righting lever (GZ) occurs at an angle of less than 20° approval of the stability should be considered by The Bahamas Maritime Authority as a special case.

11.2.1.4 For the purpose of assessing whether the stability criteria are met, GZ curves should be produced for the loading conditions applicable to the operation of the vessel.

11.2.1.5 Superstructures

.1 The buoyancy of enclosed superstructures complying with regulation 3(10)(b) of the ICLL may be taken into account when producing GZ curves.

.2 Superstructures, the doors of which do not comply with the requirements of regulation 12 of ICLL, should not be taken into account.

11.2.1.6 High Speed Vessels

In addition to the criteria above, designers and builders should address the following hazards which are known to effect vessels operating in planing modes or those achieving relatively high speeds:

.1 directional instability, often coupled to roll and pitch instabilities;

.2 bow diving of planing vessels due to dynamic loss of longitudinal stability in calm seas;

.3 reduction in transverse stability with increasing speed in monohulls;

.4 porpoising of planing monohulls being coupled with pitch and heave oscillations;

.5 generation of capsizing moments due to immersion of chines in planing monohulls (chine tripping),

11.2.2 Sailing vessels

11.2.2.1 Monohulls

.1 Curves of statical stability (GZ curves) for at least the Loaded Departure with 100% consumables and the Loaded Arrival with 10% consumables should be produced.

.2 The GZ curves required by .1 should have a positive range of not less than 90°. For vessels of more than 45m, a range of less than 90° may be considered but may be subject to agreed operational criteria.

.3 In addition to the requirements of .2, the angle of steady heel should be greater than 15° (see figure). The angle of steady heel is obtained from the intersection of a "derived wind heeling lever" curve with the GZ curve required by .1.

In the figure:

'dwhl' = the "derived wind heeling lever" at any angle θ°

$$= 0.5 \times WLO \times \cos^{13}\theta$$

where $WLO = \dfrac{GZf}{\cos^{1.3}\theta f}$

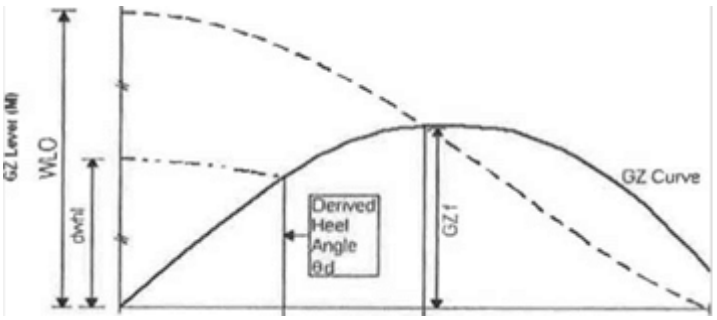

Noting that —

WLO is the magnitude of the actual wind heeling lever at 0° which would cause the vessel to heel to the "down flooding angle" 0_f or 60° whichever is least.

GZ_f is the lever of the vessel's GZ at the down flooding angle (0_f) or 60° whichever is least.

0_d is the angle at which the 'derived wind heeling' curve intersects the GZ curve. (If 0d is less than 15° the vessel will be considered as having insufficient stability for the purpose of the Code).

0_f the 'down-flooding angle' is the angle of heel causing immersion of the lower edge of openings having an aggregate area, in square metres, greater than:

$\frac{\triangle}{1500}$ where $\triangle$= vessels displacement in tonnes

All regularly used openings for access and for ventilation should be considered when determining the downflooding angle. No opening regardless of size which may lead to progressive flooding should be immersed at an angle of heel of less than 40°. However, air pipes to tanks can be disregarded.

If as a result of immersion of openings in a superstructure a vessel cannot meet the required standard those superstructure openings may be ignored and the openings in the weather deck used instead to determine θ_f. In such cases the GZ curve should be derived without the benefit of the buoyancy of the superstructure.

It might be noted that provided the vessel complies with the requirements of sections 11.2.2.1.1, 11.2.2.1.2 and 11.2.2.1.3 and is sailed with an angle of heel which is no greater than the 'derived angle of heel', it should be capable of withstanding a wind gust equal to 1.4 times the actual wind velocity (i.e. twice the actual wind pressure) without immersing the 'down flooding openings', or heeling to an angle greater than 60°.

11.2.2.2 Multi-hull

.1 Curves of statical stability in both roll and pitch shall be prepared for at least the Loaded Arrival with 10% consumables. The VCG shall be obtained by one of the three methods listed below —

.1 inclining of complete craft in air on load cells, the VCG being calculated from the moments generated by the measured forces;

.2 separate determination of weights of hull and rig (comprising masts and all running and standing rigging), and subsequent calculation assuming that the hull VCG is 75% of the hull depth above the bottom of the canoe body, and that the VCG of the rig is at half the length of the mast (or a weighted mean of the lengths of more than one mast), or

.3 a detailed calculation of the weight and CG position of all components of the vessel, plus a 15% margin of the resulting VCG height above the underside of canoe body.

.2 If naval architecture software is used to obtain a curve of pitch restoring moments, then the trim angle must be found for a series of longitudinal centre of gravity (LCG) positions forward of that necessary for the design waterline. The curve can then be derived as follows:

GZ in pitch = CG^1 x cos (trim angle)

$$\text{Trim angle} = \tan^{-1}\left[\frac{T_{FP} - T_{AP}}{L_{RP}}\right]$$

where —

CG = shift of LCG forward of that required for design trim, measured parallel to baseline

T_{FP} = draught at forward perpendicular

T_{ap} = draught at aft perpendicular

L_{bp} = length between perpendiculars

Approximations to maximum roll or pitch moments are not acceptable.

.3 Data shall be provided to the user showing the maximum advised mean apparent wind speed appropriate to each combination of sails, such wind speeds being calculated as the lesser of the following:

$$v_w = 1.5\sqrt{\frac{LM_R}{A'_S\, h \cos\phi_R + A_D b}}$$

or

$$v_w = 1.5\sqrt{\frac{LM_P}{A'_S\, h \cos\phi_P + A_D b}}$$

Where —

v_w = maximum advised apparent wind speed (knots)

LM_r = maximum restoring moment in roll (N-m)

LM_p = limiting restoring moment in pitch (N-m), defined as the pitch restoring moment at the least angle of the following —

(a) angle of maximum pitch restoring moment, or

(b) angle at which foredeck is immersed

(c) 10° from design trim —

A^1_s = area of sails set including mast and boom (square metres)

H = height of combined centre of effort of sails and spars above the waterline

ϕ_R = heel angle at maximum roll righting moment (in conjunction with LM_R)

ϕ_P = limiting pitch angle used when calculating LM_P (in conjunction with LM_P)

A_D = plan area of the hulls and deck (square metres)

B = distance from centroid of A_D to the centreline of the leeward hull.

This data shall be accompanied by the note:

In following winds, the tabulated safe wind speed for each sail combination should be reduced by the boat speed.

.4 If the maximum safe wind speed under full fore-and-aft sail is less than 27 knots, it shall be demonstrated by calculation using annex D of ISO 12217-2 (2002) that, when inverted and/or fully flooded, the volume of buoyancy, expressed in cubic metres (m3), in the hull, fittings and equipment is greater than:

1.2 x (fully loaded mass in tonnes)

thus ensuring that it is sufficient to support the mass of the fully loaded vessel by a margin. Allowance for trapped bubbles of air (apart from dedicated air tanks and watertight compartments) shall not be included.

.5 The maximum safe wind speed with no sails set calculated in accordance with .3 above should exceed 36 knots. For Short Range Yachts this wind speed should exceed 32 knots.

.6 Trimarans used for unrestricted operations should have sidehulls each having a total buoyant volume of at least 150% of the displacement volume in the fully loaded condition.

.7 The stability information booklet shall include information and guidance on —

.1 the stability hazards to which these craft are vulnerable, including the risk of capsize in roll and/or pitch;

.2 the importance of complying with the maximum advised apparent wind speed information supplied;

.3 the need to reduce the tabulated safe wind speeds by the vessel speed in following winds;

.4 the choice of sails to be set with respect to the prevailing wind strength, relative wind direction, and sea state;

.5 the precautions to be taken when altering course from a following to a beam wind.

.8 In vessels required to demonstrate the ability to float after inversion (according to .3 above), an emergency escape hatch shall be fitted to each main inhabited watertight compartment such that it is above both upright and inverted waterlines.

11.3 Damaged Stability

The following requirements are applicable to all vessels, other than those operating as Short Range Yachts. Whilst Short Range Yachts are not required to meet the damage stability criteria defined above, ultimate survivability after minor damage or flooding is recommended.

It should be noted that compliance with the damage stability criteria is not required for vessels that obtain full compliance with the ICLL conditions of assignment.

11.3.1 The watertight bulkheads of the vessel should be so arranged that minor hull damage that results in the free flooding of any one compartment will cause the vessel to float at a waterline which, at any point, is not less than 75 mm below the weather deck, or bulkhead deck if not concurrent.

11.3.2 Minor damage should be assumed to occur anywhere in the length of the vessel, but not on a watertight bulkhead.

11.3.3 Standard permeabilities should be used in this assessment, as follows:

Space	**Percentage Permeability**
Stores	60
Stores but not a substantial quantity thereof	95
Accommodation	95
Machinery	85

11.3.4 In the damaged condition, considered in section 11.3.1, the residual stability should be such that any angle of equilibrium does not exceed 7° from the upright, the resulting righting lever curve has a range to the downflooding angle of at least 15° beyond any angle of equilibrium, the maximum righting lever within that range is not less than 100 mm and the area under the curve Is not less than 0.015 metre-radians

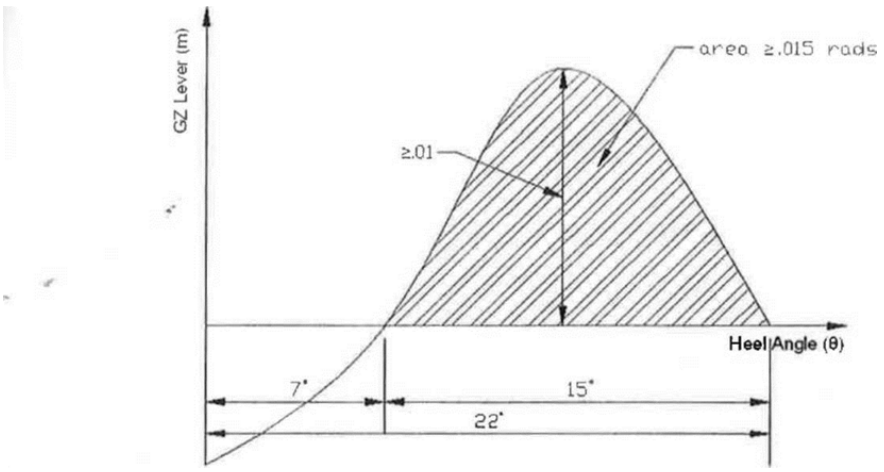

11.3.5 A vessel of 85 metres and above should meet a SOLAS 1-compartment standard of subdivision, calculated using the deterministic damage stability methodology.

11.4 Elements of Stability

11.4.1 Unless otherwise specified, the lightship weight, vertical centre of gravity (KG) and longitudinal centre of gravity (LCG) of a vessel should be determined from the results of an inclining experiment.

11.4.2 An inclining experiment should be conducted in accordance with a detailed standard which is approved by The Bahamas Maritime Authority and, in the presence of an authorised surveyor.

11.4.3 The report of the inclining experiment and the lightship particulars derived should be approved by The Bahamas Maritime Authority prior to its use in stability calculations.

At the discretion of the owner(s)/managing agent(s) and prior to approval of the lightship particulars by The Bahamas Maritime Authority, a margin for safety may be applied to the lightship weight and KG calculated after the inclining experiment. Such a margin should be clearly identified and recorded in the stability booklet.

A formal record should be kept in the stability booklet of alterations or modifications to the vessel for which the effects on lightship weight and vertical centres of gravity are offset against the margin.

11.4.4 When sister vessels are built at the same shipyard, The Bahamas Maritime Authority may accept a light-weight check on subsequent vessels to corroborate the results of the inclining experiment conducted on the lead vessel of the class.

11.5 Stability Documents

11.5.1 A vessel should be provided with a stability information booklet for the Master, which is to be approved by The Bahamas Maritime Authority.

11.5.2 The content, form and presentation of information contained in the stability information booklet should be based on the model booklet for the vessel type (motor or sailing) published by/for The Bahamas Maritime Authority.

11.5.3 A vessel with previously approved stability information which undergoes a major refit or alterations should be subjected to a complete reassessment of stability and provided with newly approved stability information.

A major refit or major alteration is one which results in either a change in the lightship weight of 2% and above and/or the longitudinal centre of gravity of 1% and above (measured from the aft perpendicular) and/or the calculated vertical centre of gravity rises by 0.25% and above (measured from the keel).

Additionally, unless it can be clearly demonstrated that no major change has occurred, a lightweight check should be earned out at the renewal survey required by section 28.4.1.

11.5.4 Sailing vessels should have, readily available, a copy of the Curves of Maximum Steady Heel Angle to Prevent Downflooding in Squalls, or in the case of a multihull, the values of maximum advised mean apparent windspeed, for the reference of the watchkeeper. This should be a direct copy taken from that contained in the approved stability booklet.

11.5.5 The overall sail area and spar weights and dimensions should be as documented in the vessel's stability information booklet. Any rigging modifications that increase the overall sail area, or the weight/dimensions of the rig aloft, must be accompanied by an approved updating of the stability information booklet.

11.5.6 For Short Range Yachts, where the damage stability has not been assessed, the following note should be added to the approved stability booklet;

"This vessel has not been assessed for damage stability, and therefore might not remain afloat in the event of damage or flooding."

12 FREEBOARD

Objective; The purpose of this section is to ensure that all vessels are assigned a freeboard in accordance with ICLL 1966. This section also outlines the requirements for draught marks to enable trim to be readily calculated.

12.1 General

12.1.1 The freeboard for the vessel and its marking should be approved by the Assigning Authority for the assignment of freeboard and issue of the International Load Line Certificate (1966).

12.1.2 Vessels should comply with ICLL for the assignment of a freeboard mark which corresponds to the deepest loading condition included in the stability information booklet for the vessel.

12.1.3 The freeboard assigned should be compatible with the strength of hull structure, intact and damage stability requirements for the vessel, and is to ensure minimum bow height requirements are met.

12.1.4 The Assigning Authority should provide the owner(s)/managing agent(s) of the vessel with a copy of the particulars of the freeboard assigned and a copy of the record of particulars relating to the conditions of assignment.

12.2 Freeboard Mark and Loading

12.2.1 The freeboard mark applied should be positioned port and starboard at amidships on the load line length and may be an all-seasons mark. The mark should be a permanent disc and be of contrasting colour to the hull of the vessel in way of the mark.

12.2.2 The fresh water freeboard allowance should be obtained by deducting from the all-seasons freeboard assigned, the quantity

$$\frac{\Delta}{4T} \text{ millimetres}$$

Where:

Δ is the displacement in salt water in tonnes at the all-seasons draught

T represents tonnes per centimetres immersion at the all-seasons load waterline

Alternatively the deduction may be taken as 1/48th of the all-seasons draught of the ship at amidships.

12.2.3 A vessel should not operate in any condition which will result in its appropriate freeboard marks being submerged when it is at rest and upright in calm water.

12.3 Datum Draught Marks

12.3.1 Datum draught marks should be provided at the bow and stern, port and starboard, and be adequate for assessing the condition and trim of the vessel. Such draught marks may be single datum lines.

12.3.2 The marks should be permanent and easily read but need not be of contrasting colour to the hull. The marks need not indicate more than one draught at each position and should be above, but within 1000 mm, of the deepest load waterline.

12.3.3 The draught to which marks relate should be indicated either above the mark on the hull and/or in the stability information booklet for the vessel. The position of the marks should be verified at initial placement by The Bahamas Maritime Authority or the vessel's Assigning Authority.

13 LIFE-SAVING APPLIANCES

Objective: The purpose of this section is to ensure that all vessels are equipped with the minimum essential LSA equipment appropriate to yacht operations. The basic provision is for the principles of SOLAS to be met; however, some sections have been identified where alternative standards can be accepted, where appropriate.

13.1 General Requirements

13.1.1 Life-Saving Appliances should be provided in accordance with table 1 - Life-Saving Appliances.

13.1.2 All equipment fitted should be of a type which has been accepted by The Bahamas Maritime Authority (See Bulletin No 71) as complying with IMO Lifesaving Appliances Code and IMO Resolution MSC.81(70).

13.1.3 Additional life-saving equipment which is provided should meet the requirements of section 13.1.2.

When personal safety equipment is provided for use in water sports activities, arrangements for its stowage should ensure that it will not be used mistakenly as life-saving equipment in an emergency situation.

13.1.4 All life-saving equipment carried should be fitted with retro-reflective material in accordance with the recommendations of IMO Resolution A.658-(16) as amended.

13.1.5 Life raft embarkation arrangements should com-ply with the following:

.1 Where the distance between the embarkation deck and the top of the life raft buoyancy tube exceeds 1 metre with the vessel in its lightest condition, an embarkation ladder is to be provided. A means for fastening is to be provided and ladders are to be readily available for use at all times.

.2 Where the distance between the embarkation deck and the top of the life raft buoyancy tube exceeds 4.5 metres with the vessel in its lightest condition, davit launched life rafts and at least

one launching appliance for launching are to be provided on each side of the vessel.

13.1.6 Falls for launching devices are to comply with IMO Lifesaving Appliances Code. When falls are of stainless steel, they should be renewed at intervals not exceeding the service life recommended by the manufacturer, or where no service life is stated be treated as galvanised steel falls. Falls of alternative materials may be considered by The Bahamas Maritime Authority.

13.1.7 Every inflatable or rigid inflatable rescue boat, inflatable boat, inflatable life raft and hydrostatic release unit should be serviced, at intervals not exceeding 12 months, at an approved service station. Hydrostatic release units which have been approved for a service life of 2 years and which should be replaced at the end of their life need not be serviced after 1 year.

13.1.8 Maintenance of equipment should be carried out in accordance with the instructions for onboard maintenance.

13.1.9 The stowage and installation of all life-saving appliances is to be to the satisfaction of The Baha-mas Maritime Authority.

13.1.10 All life-saving appliances should be in working order and be ready for immediate use at the commencement of, and at all times during, the voyage.

13.1.11 For a vessel equipped with stabiliser fins or having other projections at the sides of the hull, special consideration should be given, and provisions made, as necessary to avoid possible interference with the safe evacuation of the vessel in an emergency.

13.1.12 Means should be provided to prevent overboard discharge of water into survival craft.

Table 1 – LIFE SAVING APPLIANCES

VESSEL SIZE	Short Range Yacht	≥24m	≥ 500 GT	≥85m
LIFEBOATS (see 13.2.1)				YES
LIFERAFTS (see 13.2.2)	YES	YES	YES	YES
MANOVERBOARD RECOVERY SYSTEM (see 13.2.3.3)	YES			
RESCUE BOAT (see 13.2.3)		YES	YES	YES
LIFEJACKETS (see 13.2.4)	YES	YES	YES	YES
IMMERSION SUITS (see 13.2.5)	YES	YES	YES	YES/2/0
LIFEBUOYS (TOTAL)	4	4	8	8
LIFEBUOYS WITH LIGHT AND SMOKE (see 13.2.6.1)	2	2	2	2
LIFEBUOYS WITH LIGHT			2	2
LIFEBUOYS WITH BUOYANT LIFELINE (see 13.2.6.2)	2	2	2	2
SET OF LINE THROWING APPLIANCES (4 lines plus 4 charges)	1	1	1	1
ROCKET PARACHUTE FLARES	6	6	12	12
TWO-WAY RADIOTELEPHONE SETS	2	2	2	3
EPIRB (see 13.2.7)	1	1	1	1
SART (see 13.2.8)	1	1	2	2
GENERAL ALARM (see 13.2.9)	YES	YES	YES	YES
LIGHTING (see13.2.10)	YES	YES	YES	YES
POSTERS AND SIGNS SHOWING SURVIVAL CRAFT AND EQUIPMENT OPERATING INSTRUCTIONS	YES	YES	YES	YES
TRAINING MANUAL	YES	YES	YES	YES
INSTRUCTIONS FOR ONBOARD MAINTENANCE	YES	YES	YES	YES
LIFESAVING SIGNALS AND RESCUE POSTER - SOLAS No 1 IN WHEELHOUSE (see 13.2.11)	YES	YES	YES	YES

13.2 Equipment Carriage Requirements

13.2.1 Lifeboats (Required for vessels over 85m in length)

13.2.1.1 When lifeboats are required to be carried their acceptance is conditional upon the provision of suitable stowage and launching arrangements.

13.2.1.2 When lifeboats are provided on each side of the vessel, the lifeboat(s) on each side should be of capacity to accommodate the total number of persons onboard.

13.2.1.3 Alternative arrangements to the carriage of life-boats may be considered as indicated below —

.1 substitution of lifeboats by life crafts where the vessel complies with a SOLAS 2-compartment subdivision standard; or

.2 substitution of lifeboats by a sufficient number of davit launched life rafts such that in the event of any one life raft being lost or rendered unserviceable, sufficient aggregate capacity remains on either side of the vessel for all persons on board. Additionally, one approved rescue boat should be provided on either side of the vessel.

13.2.1.4 A lifeboat will also be acceptable as a rescue boat provided it also meets the requirements of IMO Lifesaving Appliances Code as a rescue boat.

13.2.2 Life rafts

13.2.2.1 The life rafts carried are to be stowed in GRP containers and must contain the necessary "emergency pack". For Short Range Yachts, or vessels operating within 60 miles from a safehaven, life rafts provided may be equipped with a "SOLAS B Pack". For all other vessels, life rafts should be equipped with a "SOLAS A Pack".

13.2.2.2 Life raft approval includes approval of their stowage, launching and float-free arrangements.

13.2.2.3 For vessels of less than 85m in length, or those complying with section 13.2.1.3, a sufficient number of life rafts should be provided so that in the event of any one life raft being lost or rendered unserviceable, sufficient aggregate capacity re-mains on either side of the vessel for all persons on board. This may be achieved by transferring life rafts from one side to the

other. Where life rafts are transferable, this requirement may be met by the ability of the rafts to be transferred within 5 minutes, as below:

Life rafts of 6 -15 persons capacity to be carried by 2 persons.

Life rafts of more than 15 persons capacity to be carried by 4 persons.

13.2.2.4 When lifeboats are provided in accordance with section 13.2.1.2, sufficient life rafts are to be provided such that in the event of any one lifeboat being lost or rendered unserviceable, sufficient aggregate life raft capacity remains on either side of the vessel for all persons onboard. Where life rafts are transferable, this requirement may be met by the ability of the rafts to be transferred within 5 minutes, as detailed in section 13.2.2.3.

13.2.2.5 GRP containers containing life rafts should be stowed on the weatherdeck or in an open space and fitted with hydrostatic release units so that the life rafts will float free of the vessel and automatically inflate.

13.2.2.6 Life rafts may form part of an approved Marine Evacuation System (MES). A sufficient number of systems should be provided, such that in the event of any one entire system being lost or rendered unserviceable, sufficient aggregate capacity re-mains on either side of the vessel for all persons on board.

13.2.2.7 For vessels operating with reduced personnel aboard, attention is drawn to the dangers associated with the use of large capacity life rafts with small numbers of persons embarked.

13.2.3 Rescue Boats and Recovery of Persons from the Sea

Means should be provided for the recovery of a person from the sea to the vessel and it should be assumed that the person is unconscious or unable to assist in the rescue. This requirement is satisfied by the sub-sections 13.2.3.1 to 13.2.3.3, as appropriate to the size of the vessel. If an overside boarding ladder or scrambling net is provided the ladder or net should extend from the weather deck to at least 600 mm below the lowest operational waterline.

All rescue boats covered within this section are to be equipped to the requirements of the IMO Lifesaving Appliance Code Ch V/5.1.2. Additionally, rescue boats need not be capable of being launched from both sides, and means to lower the boat from within the boat is not required.

13.2.3.1 Vessels of 500 GT and over

All vessels of 500 GT and over should be provided with a rescue boat meeting SOLAS requirements in all respects, except for the colour where white will also be considered acceptable.

The launching appliances should comply and be approved in accordance with the IMO Lifesaving Appliance Code except that when a power operated crane is fitted; it should be capable of operation either by hand or by an emergency source of power in the event of a main power failure. The routing of the emergency source of power should be considered in respect of damaged waterlines and fire.

13.2.3.2 Vessels under 500 GT

Vessels under 500 GT should be provided with a rescue boat either meeting the requirements of section 13.2.3.1 or the following:

A boat which is not SOLAS approved but which is suitable for rescue purposes. The boat may be rigid, rigid inflatable, or inflatable, and should have a capacity for not less than 4 persons, one of which should be assumed to be lying down. Tubes of rigid inflatable or inflatable boats should have a minimum of 3 buoyancy compartments. The boat is to be capable of displaying a highly visible colour. If stowed in a grab bag, required equipment need not be permanently stowed in the boat.

Launching appliances should be either of an approved type or comply with the following requirements:

The appliance should be able to launch the boat within 5 minutes. When a power operated device is fitted, it should be capable of operation either by hand or by an emergency source of power in the event of a main power failure. The routing of the emergency source of power should be considered in respect of damaged waterlines and fire.

The launching appliance and its attachments should be constructed to withstand a static proof load on test of not less than 2.2 times the maxi-mum working load. Acceptable factors of safety are 6 for wires, hooks and sheaves, and 4.5 for the remainder of the launching appliance. The appliance and its attachments should also be tested dynamically to 1.1 times the working load. It should be noted that there is no requirement to recover the rescue boat provided that the casualty and the boat's crew can be recovered on board from the boat in the water.

The design of the falls and winch system should take account of the principles of IMO Lifesaving Appliances Code Ch. VI/6.1.2.

Where it is proposed to use the running rigging on sailing vessels, the above requirements should also be met.

13.2.3.3 Short Range Yachts

Vessels operating as Short Range Yachts should either comply with requirements of sections 13.2.3.1 or 13.2.3.2, or the following:

The vessel should have sufficient mobility and manoeuvrability in a seaway to enable persons to be retrieved from the water. For assessing this ability it is not considered acceptable to retrieve persons over the stern of the vessel or adjacent to the propeller(s). The recovery location should be visible from the conning position at all times during the recovery, although this may be achieved by the use of remote controls where necessary.

The vessel should be provided with suitable equipment and/or arrangements to enable the person(s) to be recovered without further persons entering the water.

13.2.4 Lifejackets

13.2.4.1 One adult SOLAS approved lifejacket should be provided for each person onboard plus spare adult lifejackets sufficient for at least 10% of the total number of persons onboard or two, whichever is the greater. Each lifejacket should be fitted with a light and whistle.

13.2.4.2 Included in the above number of lifejackets there should be at least two SOLAS approved inflatable lifejackets for use of the crew of any rescue boat or inflatable boat carried on board.

13.2.4.3 In addition to the adult lifejackets, a sufficient number of children's lifejackets should be pro-vided for children carried on the vessel.

13.2.5 Immersion Suits

13.2.5.1 One approved immersion suit should be provided for each person onboard. Due consideration should be given to the provision of appropriate immersion/thermal protection for children carried on board; these should be of the insulated type.

However, on application to the Administration, the non-insulated type may be acceptable for Short Range Yachts dependant on the area of operation.

However, these need not be provided if the vessel is operating in water of surface temperatures of 20°C or more.

13.2.6 Lifebuoys

13.2.6.1 Lifebuoys port and starboard provided with combined self-igniting light and self-activating smoke signals should be capable of quick deployment from the navigating bridge.

13.2.6.2 The attached buoyant lifeline required on each of two of the lifebuoys is to have a minimum length of 30 metres.

13.2.6.3 Each lifebuoy should be marked with the vessels name and Port of Registry.

13.2.7 EPIRB

An approved EPIRB should be installed in an easily accessible position ready to be manually released, capable of being placed in a survival craft and floating free if the vessel sinks. All EPIRBs should be registered with The Bahamas Maritime Authority. EPIRBS are to be tested annually and serviced at not more than five yearly intervals by an approved shore based maintainer.

13.2.8 Radar Transponders (SART)

The SART is to be stowed in an easily accessible position so that it can rapidly be placed in any survival craft. Means should be provided in order that it can be mounted in the survival craft at a height of at least 1 metre above sea level.

13.2.9 General Alarm

13.2.9.1 For a vessel of less than 500 GT this alarm may consist of the ship's whistle or siren providing it can be heard in all parts of the vessel.

13.2.9.2 For a vessel of 500 GT and above the requirement of section 13.2.9.1 is to be supplemented by an electrically operated bell or Klaxon system, which is to be powered from the vessel's main supply and also the emergency source of power (see sections 8A and 8B).

13.2.9.3 For a vessel of 85m in length and above, in addition to the requirements of section 13.2.9.2, a public address system or other suitable means of communication should be provided.

13.2.10 Lighting

13.2.10.1 Alleyways, internal and external stairways, and exits giving access to, and including, the muster and embarkation stations should be adequately lit (see also sections 8A and 8B).

13.2.10.2 Adequate lighting is to be provided in the vicinity of survival craft, launching appliance(s) (when provided) and the overside area of sea in way of the launching position(s), the lighting should be supplied from the emergency source of power.

13.2.11 Life-saving Signals and Rescue Poster

When display space in the wheelhouse is restricted, the 2 sides of a SOLAS No.2 poster (as contained in life raft equipment packs) may be displayed *in lieu* of a SOLAS No. 1 poster.

14 FIRE SAFETY

14.1 Protection of spaces containing vehicles or craft with fuel in their tanks or lockers storing such fuels

14.1.1 Special consideration should be given to safe conditions of carriage of petrol and other highly flammable liquids either in hand portable containers/tanks or in the tanks of vehicles (such as personal water craft, motor cars and helicopters) which may be transported. This is not considered applicable to diesel stowage.

14.1.2 The quantity of petrol and/or other highly flammable liquids carried should be kept to a mini-mum, generally up to 150 litres maximum. Greater quantities may be specially considered by The Bahamas Maritime Authority on receipt of a reasoned case made by the master.

14.1.3 Containers used for the carriage of flammable liquids should be constructed to a recognised standard appropriate to the contents and each container clearly marked to indicate its contents.

14.1.4 Small lockers on open deck for the stowage of hand portable containers of petrol should be located away from high risk areas, have no electrical fittings, and be provided with the following —

1. Natural ventilation openings top and bottom
2. Drainage leading overboard
3. Means of securing the fuel containers
4. A facility to boundary-cool the locker.

14.1.5 Enclosed spaces, and larger lockers on open deck, designated for the safe carriage of petrol or similar fuel or vehicles with fuel in their tanks should be fitted with:

.1 A manual water spray system giving a coverage of 3.5 ltr/m^2/minute over the total area of deck, which may be taken from the fire main with the isolating valve located outside the garage. An equivalent arrangement may be

considered. Adequate provision should be made for drainage of water introduced to the space. This should not lead to machinery or other spaces where a source of ignition may exist.

.2 A fixed fire detection and fire alarm system complying with the requirements of SOLAS regulations II-2/Part A/Fire Safety Systems Code Chapter IX. The system within the space should also comply with section 14.1.5.5.

.3 Ducted mechanical exhaust ventilation, which is isolated from other ventilated spaces, should provide at least 6 air changes per hour (based on the empty space); and for which reduction of the airflow should be signalled by an audible and visual alarm on the navigating bridge and at the "in port" control station(s). Exhaust ducting should be arranged to extract from the area low over the bilge. If the fan motors are located in the space or in the ventilation duct they should be certified safe to the correct designation for the flammable vapour or liquid. The ventilation fans should be of a non-sparking type and the ventilation system should be capable of rapid shut down and effective closure in event of fire.

.4 A suitable gas detection system is to be provided, with audible and visual alarm in the wheelhouse and where it may always be observed by the crew.

.5 All electrical equipment located in such spaces should be certified safe for petroleum vapours (see Annex 5, The Bahamas National Annex).

.6 Electrical equipment located in such spaces should be provided with easily accessible means of isolation (on all poles), located outside the space. These isolators should be grouped together as far as practicable and be clearly marked. This option should not be used for safety systems such as steering motors, rudder indicators, etc.

.7 Regardless of the height of installation it is considered that the following equipment

located within the space should be certified safe for the flammable vapours —

(a) gas detection system;

(b) bilge alarm;

(c) fire detection system;

(d) at least one light fitting (on a dedicated circuit, possibly emergency).

It should be noted that electrical equipment includes starters, distribution boxes, etc.

14.2 Miscellaneous

14.2.1 Construction and arrangement of saunas

14.2.1.1 The perimeter of the sauna should be of "A" class boundaries and may include changing rooms, showers and toilets. The sauna should be insulated to A-60 for vessels of 500 GT and over, A-30 for vessels under 500 GT, and B-15 for Short Range Yachts, against other spaces except those inside of the perimeter.

14.2.1.2 Bathrooms with direct access to saunas may be considered as part of them. In such cases, the door between sauna and the bathroom need not comply with fire safety requirements.

14.2.1.3 Wooden linings on bulkheads and ceilings are permitted. The ceiling above the oven should be lined with a non-combustible plate with an air gap of at least 30 mm. The distance from the hot surfaces to combustible materials should be at least 500 mm or the combustible materials should be protected (e.g. non-combustible plate with an air gap of at least 30 mm).

14.2.1.4 Wooden benches are permitted.

14.2.1.5 The sauna door should open outwards by pushing.

14.2.1.6 Electrically heated ovens should be provided with a timer.

14.2.1.7 All spaces within the perimeter of the sauna are to be protected by a fire detection and alarm system and an automatic sprinkler system.

14.2.2 Construction and arrangement of Thermal Suite (e.g. Steam Room)

14.2.2.1 The perimeter of the thermal suite may include changing rooms, showers and toilets.

14.2.2.2 Bathrooms with direct access to suite may be considered as part of it. In such cases, the door between suite and the bathroom need not comply with fire safety requirements.

14.2.2.3 If the steam generator is contained within the perimeter, the suite boundary should be constructed to an A-0 standard, or B-0 for Short Range Yachts. If the steam generator is not contained within the perimeter then the boundaries of the space should be constructed of B-0 class divisions, and the steam generator should be protected by A-0 standard divisions or B-0 for Short Range Yachts.

14.2.2.4 If a suite arrangement contains a sauna then the requirements contained in section 14.2.1 are applicable, regardless of the steam generator lo-cation.

14.2.2.5 All spaces within the perimeter are to be protected by a fire detection and alarm system and an automatic sprinkler.

14.2.3 Deep Fat Frying Equipment

Attention is drawn to the requirements SOLAS II-2/10.6.4 for fire extinguishing systems for deep fat cooking equipment.

For fryers of up to 15 litres cooking oil capacity, the provision of a suitably sized class F extinguisher (BS7937:2000 or equivalent) together with manual isolation of the electrical power supply is acceptable.

14.3 Fire Control Plan(s)

14.3.1 A fire control (general arrangement) plan(s) should be permanently exhibited for the guidance of the Master and crew of the vessel. The content of the plan(s) should adequately show and describe the principal fire prevention and protection equipment and materials. As far as practical, symbols used on the plans should comply with a recognised international standard. The fire control plan may be a combined Fire & Safety Plan, which should show the positions of stowage of the life-saving and fire appliances.

14.3.2 For each deck, the plan(s) should show the position of control stations; sections of the vessel which are enclosed respectively by “A” class divisions and “B”

class divisions; location of flammable liquid storage (see section 14.1); particulars of and locations of fire alarms, fire detection systems, sprinkler installations, fixed and portable fire extinguishing appliances; fireman's outfit(s); means of access and emergency escapes for compartments and decks; locations and means of control of systems and openings which should be closed down in a fire emergency.

14.3.3 The plan(s) required by section 4.3.1 should be kept up to date. Up-dating alterations should be applied to all copies of the plan(s) without delay. Each plan should include a list of alterations and the date on which each alteration was applied.

14.3.4 A duplicate set of the plan(s) should be permanently stored in a prominently marked weathertight enclosure readily accessible to assist non-vessel fire-fighting personnel who may board the vessel in a fire emergency.

14.3.5 Instructions valid to the maintenance and operation of all the equipment and installations on-board for the fighting and containment of fire should be kept in one document holder, readily available in an accessible location.

14A STRUCTURAL FIRE PROTECTION - VESSELS OF LESS THAN 500 GT

Objective: The purpose of this section is to ensure a consistent level of structural fire protection. The section is primarily concerned with protecting high risk spaces such as the engine room and galley. It also makes provision for restricting the quantity of combustible materials and sets out the principles for detection of fire and effective escape.

14A.1 General

14A.1.1 Terms used in this section should have the same meaning as defined in SOLAS.

Table 14A.1.1 is a guide to the major requirements of this section. The table is intended as a quick reference to the requirements and is not to be used in isolation when designing the fire safety arrangements.

Table 14A.1.1

Passive fire protection (see 14A.2)	Category A machinery spaces: 'A-30'/A-0'.
Means of escape (see 14A.3) • Category A machinery spaces. • Accommodation and other spaces.	Two (2) Two (2)
Fixed fire detection system (see 14A.7)	• Fitted in machinery spaces. • Fitted in service spaces, control stations and accommodation spaces.
Automatic sprinkler system or equivalent	Fitted in yachts that do not meet restrictions on combustible materials (14A.2.3.6 & 14A.2.3.8)

14A.2 Structure

Purpose

The purpose of this section is to provide for containment of a fire in the space of origin. For this purpose, the following functional requirements should be met —

- the ship should be subdivided by thermal and structural boundaries as required by this section;
- thermal insulation of boundaries should have due regard to the fire risk of the space and adjacent spaces;
- the fire integrity of the divisions should be maintained at openings and penetrations.

14A.2.1 Forms of construction - Fire divisions

14A.2.1.1 Fire divisions required by section 14A.2.2 are to be constructed in accordance with the remaining paragraphs of this sub-section.

14A.2.1.2 Fire divisions using steel equivalent, or alternative forms of construction may be accepted if it can be demonstrated that the material by itself, or due to non-combustible insulation provided, has the fire resistance properties equivalent to those divisions required by section 14A.2.2.1.

14A.2.1.3 Insulation required by section 14A.2.1.2 is to be such that the temperature of the structural core does not rise above the point at which the structure would begin to lose its strength at any time during the applicable exposure to the standard fire test as referenced in the IMO FTP Code. For 'A' class divisions, the applicable exposure is 60 minutes, and for 'B' class divisions, the applicable fire exposure is 30 minutes.

14A.2.1.3.1 For aluminium alloy structures, the insulation is to be such that the temperature of the structural core does not rise more than 200°C above the ambient temperature at any time during the applicable fire exposure.

14A.2.1.3.2 For composite structures, the insulation is to be such that the temperature of the laminate does not rise more than the minimum temperature of deflection under load of the resin at any time during the applicable fire exposure. The temperature of deflection under load is to be determined in accordance with a recognised international standard.

14A.2.1.3.3 Insulation need only be applied on the side that is exposed to the greatest fire risk, i.e. inside the

engine room. A division between two such spaces should however be insulated on both sides unless it is a steel division.

14A.2.1.3.4 Special attention is to be given to the fixing of fire door frames in bulkheads constructed of materials other than steel. Measures are to be taken to ensure that the temperature of the fixings when exposed to fire does not exceed the temperature at which the bulkhead itself looses strength.

14A.2.2 Structural fire protection

14A.2.2.1 (a) Machinery spaces of category A are to be enclosed by 'A-30' class divisions.

(b) For Short Range Yachts, machinery spaces of category A are to be enclosed by 'B-15' class divisions.

14A.2.2.2 Openings in 'A' and 'B' class divisions are to be provided with permanently attached means of closing that are to be at least as effective for resisting fires as the divisions in which they are fitted. Generally, windows should not be fitted in machinery space boundaries.

14A.2.2.3 Where 'A' class divisions are penetrated for the passage of electric cables, pipes, trunks, ducts, etc., or for girders, beams or other structural members, arrangements are to be made to ensure that the fire resistance is not impaired.

14A.2.2.4 Where 'B' class divisions are penetrated for the passage of electric cables, pipes, trunks, ducts, etc., or for the fitting of ventilation terminals, lighting fixtures and similar devices, arrangements are to be made to ensure that the fire resistance is not impaired.

14A.2.2.5 Where the structure or 'A' class divisions are required to be insulated, it is to be ensured that the heat from a fire is not transmitted through the intersections and terminal points of the divisions or penetrations to uninsulated boundaries. Where the insulation installed does not achieve this, arrangements are to be made to prevent this heat transmission by insulating the horizontal and vertical boundaries or penetrations for a distance of 450 mm (this may be reduced to 380 mm on steel divisions only).

14A.2.3 Materials

14A.2.3.1 Except in refrigerated compartments of service spaces, all insulation (e.g. fire and comfort) is to be of not readily-ignitable materials.

14A.2.3.2 Pipes penetrating 'A' or 'B' class divisions are to be of approved materials having regard to the temperature such divisions are required to withstand.

14A.2.3.3 Pipes conveying oil or other combustible liquids through accommodation and service spaces are to be of approved materials having regard to the fire risk.

14A.2.3.4 Materials readily rendered ineffective by heat are not to be used for overboard scuppers, sanitary discharges, and other outlets which are close to the waterline and where the failure of the material in the event of fire would give rise to danger of flooding. Due regard should be paid to the IMO Fire Test Procedures Code.

14A.2.3.5 Vapour barriers and adhesives used in conjunction with insulation, as well as insulation of pipe fittings for cold service system need not be non-combustible, but they are to be kept to the minimum quantity practicable and their exposed surfaces are to have low flame spread characteristics.

14A.2.3.6 Upholstery composites (fabric in association with any backing or padding material) used throughout the vessel should be approved in accordance with the IMO FTP Code, Annex 1, Part 8, or equivalent. This does not apply to spaces fitted with sprinklers or equivalent approved fixed fire extinguishing systems.

14A.2.3.7 It is recommended that organic foams used in upholstered furniture and mattresses are of the combustion modified type.

14A.2.3.8 Suspended textile materials such as curtains or drapes should be approved in accordance with the IMO FTP Code, Annex 1, Part 7, or equivalent. This does not apply to spaces fitted with sprinklers or equivalent approved fixed fire extinguishing systems.

14A.2.4 Surface of insulation

In spaces where penetration of oil products is possible, the surface of insulation is to be impervious to oil or oil vapours. Insulation boundaries are to be arranged to avoid immersion in oil spillages.

14A.2.5 Fuel arrangements

14A.2.5.1 Arrangements for the storage, distribution and utilisation of oil fuel are to be such as to minimise the risk of fire or explosion.

14A.2.5.2 Oil fuel tanks situated within, or adjacent to, the boundaries of category A machinery spaces are not to contain oil fuel having a flashpoint of less than 60°C.

14A.2.5.3 Oil fuel, lubricating oil and other flammable oils are not to be carried in fore peak tanks.

14A.2.5.4 Every oil fuel pipe, which, if damaged, would allow oil to escape from a storage, settling or daily service tank situated above the double bottom, shall be fitted with a cock or valve directly on the tank capable of being closed from a safe position outside the space concerned in the event of a fire occurring in the space in which such tanks are situated.

14A.2.5.5 Means are to be provided to stop fuel transfer pumps, oil fired boilers and separators from outside the machinery space.

14A.2.5.6 Fuel filter bowls should be of metal, construction.

14A.3 Means of escape

14A.3.1 Purpose

The purpose of this section is to provide for a means of escape so that persons onboard can safely and swiftly escape to the life raft embarkation deck. For this purpose, the following functional requirements should be met —

- safe escape routes should be provided;
- escape routes should be maintained in a safe condition, clear of obstacles; and
- additional aids for escape should be provided as necessary to ensure accessibility,

clear marking, and adequate design for emergency situations.

14A.3.2 Requirements

14A.3.2.1 Stairways, ladders and corridors serving all spaces normally accessible are to be arranged so as to provide ready means of escape to a deck from which embarkation into survival craft may be effected.

14A.3.2.2 The arrangement of the vessel should be such that all compartments are provided with a satisfactory means of escape. In the case of the accommodation, two means of escape from every restricted space or group of spaces should be provided. Concealed escapes and escape routes are to be clearly marked to ensure ready exit.

Category A machinery spaces on motor vessels should also be provided with a minimum of two means of escape. Other machinery spaces should also have at least two means of escape as widely separated as possible, except where the small size of the machinery space makes it impracticable —

(a) The normal means of access to the accommodation and service spaces below the open deck is to be arranged so that it is possible to reach the open deck without passing through a galley, engine room or other space with a high fire risk, wherever practicable.

(b) Where accommodation arrangements are such that access to compartments is through another compartment, the second escape route is to be as remote as possible from the main escape route. This may be through hatches of adequate size, leading to the open deck or separate space to the main escape route.

(c) In exceptional circumstances a single means of escape may be accepted for spaces, other than accommodation spaces, which are entered only occasionally, if the escape route does not pass through a galley, machinery space or watertight door.

(d) No escape route should be obstructed by furniture or fittings. Additionally, furniture along escape routes should be secured in place to prevent shifting if the yacht rolls or lists.

(e) All doors in escape routes are to be openable from either side. In the direction of escape they are all to be openable without a key. All handles on the inside of weathertight doors and hatches are to be non-removable. Where doors are lockable measures to ensure access from outside the space are to be provided for rescue purposes.

14A.3.2.3 Lifts are not considered as forming a means of escape.

14A.4 Ventilation systems

14A.4.1 Ventilation fans for machinery spaces and enclosed galleys are to be capable of being stopped, and main inlets and outlets of ventilation systems closed, from outside the spaces being served. This position should not be readily cut off in the event of a fire in the spaces served.

14A.4.2 Ventilation ducts for category A machinery spaces, galleys, spaces containing vehicles or craft with fuel in their tanks, or lockers storing such fuels, are generally not to pass through accommodation spaces, service spaces or control stations. Where this is unavoidable, the trunking should be constructed of steel at least 3 mm thick or equivalent to the satisfaction of The Bahamas Maritime Authority. The ducting within the accommodation should be fitted with —

.1 fire insulation to A-30 (B-0 on Short Range Yachts) standard to a point at least 5 metres from the machinery space or galley; and

.2 automatic fire dampers located in the deck or bulkhead within the accommodation where the trunking passes from the machinery space or galley into the accommodation. These automatic fire dampers are also to be manually closable from outside the galley or machinery space.

14A.4.3 Ventilation ducts for accommodation spaces, service spaces or control stations are not to pass through category A machinery spaces, spaces containing vehicles or craft with fuel in their tanks, or lockers storing such fuels, unless the ducts are constructed of steel and arranged to preserve the integrity of the division.

14A.4.4 Store-rooms containing highly flammable products are to be provided with ventilation arrangements that are separate from other ventilation systems. Ventilation is to be arranged to prevent the build-up of flammable vapours at high and low levels. The inlets and outlets of ventilators are to be positioned so that they do not draw from or vent into an area which would cause undue hazard, and are to be fitted with spark arresters.

14A.4.5 Ventilation systems serving category A machinery spaces are to be independent of systems serving other spaces.

14A.4.6 All enclosed spaces containing free standing fuel tanks are to be ventilated independently of systems serving other spaces.

14A.4.7 Ventilation is to be provided to prevent the accumulation of dangerous concentrations of flammable gas which may be emitted from batteries.

14A.5 Arrangements for gaseous fuel for domestic purposes

14A.5.1 Where gaseous fuel is used for domestic purposes, the arrangements for the storage, distribution and utilisation of the fuel is to be such that, having regard to the hazards of fire and explosion which the use of such fuel may entail, the safety of the yacht and the persons onboard is preserved. The installation is to be in accordance with recognised National or International Standards. Hydrocarbon gas detectors and carbon monoxide detectors should be provided.

14A.5.2 Gas cylinders, regulators and safety devices should be stowed on the open deck (where leakage will not accumulate) or in a compartment that is vapour-tight to the vessels interior, and fitted with a vent and drain, so that any gas which may leak can disperse overboard.

14A.5.3 An open flame gas appliance provided for cooking, heating or any other purpose should comply with the requirements of international standards.

The installation of an open flame gas appliance should comply with the appropriate provisions of Annex 3.

14A.6 Space heaters

Space heaters, if used, are to be fixed in position and constructed so as to reduce fire risks to a minimum. The design and location of these units is to be such that clothing, curtains or other similar materials cannot be scorched or set on fire by heat from the unit.

14A.7 Fixed fire detection and fire-alarm systems

The purpose of this section is to detect a fire in the space of origin and to provide for an alarm for safe escape and fire-fighting activity.

A fixed fire detection and fire-alarm system is to be fitted in all enclosed spaces except those containing no significant fire risk (toilets, bathrooms, void spaces, etc). The fixed fire detection and fire-alarm system is to be installed in accordance with the requirements of SOLAS II-

2/7 and the IMO Fire Safety Systems Code, Chapter 9.

14A.8 Fixed fire-extinguishing systems not required by this section

Where a fixed fire-extinguishing system not required by this section, is installed, the arrangement is to be to the satisfaction of The Bahamas Maritime Authority.

14B STRUCTURAL FIRE PROTECTION – VESSELS OF 500 GT AND OVER

Objective: The purpose of this section is to ensure a consistent level of structural fire protection. The principles of this section aim to achieve a level of fire protection compatible with the requirements of SOLAS for passenger ships carrying up to 36 passengers. These have been adapted where appropriate to fit the general yacht design philosophy. Much emphasis is placed on the provision of sprinkler/mist systems as trade-off for certain aspects.

14B.1 Definitions

Terms used in this section should have the same meaning as defined in SOLAS, except as defined in section 14.1 and as follows:

"Not readily ignitable" means that the surface thus described will not continue to burn for more than 20 seconds after removal of a suitable impinging test flame.

14B.2 Table 14B.2 is a guide to the major requirements of this section. The table is intended as a quick reference to the requirements and is not to be used in isolation when designing the fire safety arrangements.

Table 14B.2

All vessels should comply with the following:

Form of construction (see 14B.2.1)	Steel or equivalent, or alternative forms of construction may be accepted subject to requirements.
Passive fire protection (see 14B.2.1 to 14B.2.7)	See tables 1 and 2
Means of escape (see 14B.2.12) • Category A machinery spaces • Accommodation, etc.	 2 (two) 2 (two)
Fixed fire detection system	• Fitted in machinery spaces • Fitted in service spaces, control stations and accommodation spaces
Fire extinguishing arrangements in Category A machinery spaces	As per SOLAS II-2/10.5
Automatic sprinkler system or equivalent (see 14B.2.14)	Fitted in all vessels

14B.2.1 Structure

Purpose

14B.2.1.1 The purpose of this section is to provide for containment of a fire in the space of origin. For this purpose, the following functional requirements should be met —

- the ship should be subdivided by thermal and structural boundaries;
- thermal insulation of boundaries should have due regard to the fire
- risk of the space and adjacent spaces;
- the fire integrity of the divisions should be maintained at openings and penetrations.

14B.2.2 Forms of construction - Fire divisions

14B.2.2.1 The hull, superstructures, structural bulkheads, decks and deckhouses should be constructed of steel or other equivalent material.

14B.2.2.2 However, in cases where any part of the structure is of aluminium alloy, the following should apply —

.1 Insulation of aluminium alloy components of "A" or "B" class divisions, except structure which, in the opinion of The Bahamas

Maritime Authority, is non-load-bearing, should be such that the temperature of the structural core does not rise more than 200°C above the ambient temperature at any time during the applicable fire exposure to the standard fire test. This insulation is to be applied on all sides except for the upper sides of decks and the outside of the vessel.

.2 Special attention should be given to the insulation of aluminium alloy components of columns, stanchions and other structural members required to support lifeboat and liferaft stowage, launching and embarkation areas, and "A" and "B" class divisions to ensure that for members —

(a) supporting lifeboat and liferaft areas and "A" class divisions, the temperature rise limitation specified in .1 above should apply at the end of one hour; and

(b) supporting "B" class divisions, the temperature rise limitation specified in .1 above should apply at the end of half an hour.

.3 Aluminium alloy components of divisions that are required to be equivalent to steel (identified by an * in tables 1 and 2) should be insulated with 25 mm of mineral wool approved for use in "A" class divisions or with an equivalent insulation acceptable to The Bahamas Maritime Authority

14B.2.2.3 For composite structures, the insulation is to be such that the temperature of the laminate does not rise more than the minimum temperature of deflection under load of the resin at any time during the specified fire exposure. The temperature of deflection under load is to be determined in accordance with the requirements of a recognised international standard. This insulation is to be applied on all sides except for the upper sides of decks and the outside of the vessel.

.1 Special attention should be given to the insulation of composite components of columns, stanchions and other structural members required to support lifeboat and life

raft stowage, launching and embarkation areas, and "A" and "B" class divisions to ensure that for members —

(a) supporting lifeboat and liferaft areas and "A" class divisions, the temperature rise limitation specified in 14B.2.2.2.1 above should apply at the end of one hour; and

(b) supporting "B" class divisions, the temperature rise limitation specified in 14B.2.2.2.1 above should apply at the end of half an hour.

.2 Special attention is to be given to the fixing of fire door frames in bulkheads constructed of materials other than steel. Measures are to be taken to ensure that the temperature of the fixings when exposed to fire does not exceed the temperature at which the bulkhead itself looses strength.

14B.2.2.4 Crowns and casings of a machinery space of category A should be A60 divisions and openings therein, if any, should be suitably arranged and protected to prevent the spread of fire.

14B.2.2.5 For structures in contact with sea-water, the required insulation should extend to at least 300 mm below the lightest waterline.

14B.2.2.6 Fire divisions using steel equivalent, or alternative forms of construction may be accepted if it can be demonstrated that the material by itself, or due to non-combustible insulation provided, has the fire resistance properties equivalent to the "A" or "B" class standard required.

14B.2.2.7 Insulation required by section 14B.2.2.6 is to be such that the temperature of the structural core does not rise above the point at which the structure would begin to lose its strength at any time during the applicable exposure to the standard fire test. For "A" class divisions, the applicable exposure is 60 minutes, and for "B" class divisions, the applicable exposure is 30 minutes.

14B.2.3 Main vertical zones and horizontal zones

14B.2.3.1 Hull, superstructure and deckhouses in way of accommodation and service spaces should be subdivided into main vertical zones by "A" class divisions. These divisions should have insulation values in accordance with tables 1 and 2.

14B.2.3.2 As far as practicable, the bulkheads forming the boundaries of the main vertical zones above the bulkhead deck should be in line with watertight subdivision bulkheads situated immediately below the bulkhead deck. The length and width of main vertical zones may be extended to a maximum of 48m in order to bring the ends of main vertical zones to coincide with watertight subdivision bulkheads or in order to accommodate a large public space extending for the whole length of the main vertical zone provided that the total area of the main vertical zone is not greater than 800 m^2 on any deck. The length or width of a main vertical zone is the maximum distance between the furthermost points of the bulkheads bounding it.

14B.2.3.3 Such bulkheads should extend from deck to deck and to the shell or other boundaries.

14B.2.3.4 When a main vertical zone is subdivided by "A" class divisions for the purpose of providing an appropriate barrier between spaces protected and not protected by a sprinkler system, the divisions should be insulated in accordance with the fire insulation and integrity values given in tables 1 and 2.

14B.2.4 Bulkheads within a main vertical zone

14B.2.4.1 All bulkheads within accommodation and service spaces which are not required to be "A" class divisions should be at least "B" class or "C" class divisions as prescribed in the tables 1 and 2.

14B.2.4.2 All such divisions may be faced with combustible materials.

14B.2.4.3 All corridor bulkheads, where not required to be "A" class should be "B" class divisions which should extend from deck to deck except —

.1 when continuous "B" class ceilings or linings are fitted on both sides of the bulkhead, the portion of the bulkhead behind the continuous ceilings or lining should be of material which,

in thickness and composition, is acceptable in the construction of "B" class divisions but which should be required to meet "B" class integrity standards only in so far as is reasonable and practical in the opinion of The Bahamas Maritime Authority;

.2 the corridor bulkheads of "B" class materials may terminate at a ceiling in the corridor provided such a ceiling is of material which, in thickness and composition, is acceptable in the construction of "B" class divisions. All doors and frames in such bulkheads should be so constructed and erected to provide a "B" class standard.

14B.2.4.4 All bulkheads required to be "B" class divisions, except corridor bulkheads, should extend from deck to deck and to the shell or other boundaries unless continuous "B" class ceilings or linings are fitted on both sides of the bulkhead, in which case the bulkhead may terminate at the continuous ceiling or lining.

14B.2.5 Fire integrity of bulkheads and decks

14B.2.5.1 In addition to complying with the specific provisions for fire integrity of bulkheads and decks mentioned elsewhere in this section, the minimum fire integrity of bulkheads and decks should be as prescribed in tables 1 and 2.

14B.2.5.2 The following requirements should govern application of the tables —

.1 tables 1 and 2 should apply respectively to the bulkheads and decks separating adjacent spaces;

.2 for determining the appropriate fire integrity standards to be applied to divisions between adjacent spaces, such spaces are classified according to their fire risk as shown in categories (1) to (9) below. The title of each category is intended to be typical rather than restrictive. The number in parentheses preceding each category refers to the applicable column or row in the tables.

(1) Control stations —

- Spaces containing emergency sources of power and lighting.
- Wheelhouse and chartroom.
- Spaces containing the vessel's radio equipment.
- Fire-extinguishing rooms.
- Fire control rooms and fire-recording stations.
- Control room for propulsion machinery when located outside the machinery space.
- Spaces containing centralized fire alarm equipment.

(2) Corridors and lobbies

- Guest and crew corridors and lobbies.

(3) Accommodation spaces

- Cabins, dining rooms, lounges, offices, pantries containing no cooking appliances (other than equipment such as microwave, cookers and toasters) and similar spaces.

(4) Stairways

- Interior stairways, lifts and escalators (other than those wholly contained within the machinery space(s)) and enclosures thereto.
- In this connection, a stairway which is enclosed only at one level should be regarded as part of the space from which it is not separated by a fire door.

(5) Service spaces (low risk)

- Lockers and store-rooms not having provisions for the storage of flammable liquids and having areas less than $4m^2$, and drying rooms and laundries.

(6) Machinery spaces of category A

- Spaces so defined.

(7) Other machinery spaces

- Spaces so defined, excluding machinery spaces of category A.
- Sprinkler, drencher or fire pump spaces.

(8) Service spaces (high risk)

- Galleys, pantries containing cooking appliances, paint and lamp rooms, lockers and store-rooms having areas of $4m^2$ or more, spaces for the storage of flammable liquids, workshops other than those forming part of the machinery spaces, and spaces containing vehicles or craft with fuel in their tanks, or lockers storing such fuels storage lockers for gaseous fuels for domestic purposes.

(9) Open decks

- Open deck spaces and enclosed promenades having no fire risk. Air spaces (the space outside superstructures and deckhouses).

14B.2.5.3 Continuous "B" class ceilings or linings, in association with the relevant decks or bulkheads, may be accepted as contributing, wholly or in part, to the required insulation and integrity of a division.

14B.2.5.4 External boundaries which are required to be of steel or other equivalent material may be pierced for the fitting of windows and portlights provided that there is no requirement for such boundaries to have "A" class integrity elsewhere in this section. Similarly, in such boundaries which are not required to have "A" class integrity, doors may be of combustible materials, substantially constructed.

Table 1 - Fire integrity of bulkheads separating adjacent spaces

Spaces	(1)	(2)	(3)	(4)	(5)	(6)	(7)	(8)	(9)
Control stations (1)	$A\text{-}0_c$	A-0	A-60	A-0	A-15	A-60	A-15	A-60	*
Corridors and lobbies (2)		C_d	$B\text{-}0_d$	$A\text{-}0_a$ $B\text{-}O_d$	$B\text{-}0_d$	A-60	A-0	A-0	*
Accommodation spaces (3)			C_d	$A\text{-}0_a$ $B\text{-}0_d$	$B\text{-}0_d$	A-60	A-0	A-0	*
Stairways (4)				$A\text{-}0_a$ $B\text{-}0_d$	$A\text{-}0_a$ $B\text{-}0_d$	A-60	A-0	A-0	*
Service spaces (low risk) (5)					C_d	A-60	A-0	A-0	*
Machinery spaces of category A (6)						*	A-0	A-60	*
Other machinery spaces (7)							$A\text{-}0_b$	A-0	*
Service spaces (high risk) (8)								$A\text{-}0_b$	*
Open decks (9)									

Table 2 - Fire integrity of decks separating adjacent spaces

Spaces above Spaces below	(1)	(2)	(3)	(4)	(5)	(6)	(7)	(8)	(9)
Control stations(1)	A-0	A-0	A-0	A-0	A-0	A-60	A-0	A-0	*
Corridors and lobbies (2)	A-0	*	*	A-0	*	A-60	A-0	A-0	*
Accommodation spaces (3)	A-60	A-0	*	A-0	*	A-60	A-0	A-0	*
Stairways (4)	A-0	A-0	A-0	*	A-0	A-60	A-0	A-0	*
Service spaces (low risk) (5)	A-15	A-0	A-0	A-0	*	A-60	A-0	A-0	*
Machinery spaces of category A (6)	A-60	A-60	A-60	A-60	A-60	*	$A\text{-}60_C$	A-60	*
Other machinery spaces (7)	A-15	A-0	A-0	A-0	A-0	A-0	*	A-0	*
Service spaces (high risk) (8)	A-60	A-0	A-0	A-0	A-0	A-60	A-0	A-0	*
Open decks (9)	*	*	*	*	*	*	*	*	*

Notes: To be applied to both tables 1 and 2, as appropriate —

a For clarification on which applies, see sections 14B.2.4 and 14B.2.6.

b Where spaces are of the same numerical category and subscript $_b$ appears, a bulkhead or deck of the rating shown in the tables is only required when

the adjacent spaces are for a different purpose, e.g. in category (9). A galley next to a galley does not require a bulkhead but a galley next to a paint room requires an "A-0" bulkhead.

c Bulkheads separating the wheelhouse and chart-room from each other may be "B-0" rating.

d For the application of section 14B.2.3.1, "B-O" and "C", where appearing in table 1, should be read as "A-0".

e Fire insulation need not be fitted if the machinery space in category (7), in the opinion of The Bahamas Maritime Authority, has little or no fire risk.

* Where an asterisk appears in the tables, the division is required to be of steel or other equivalent material but is not required to be of "A" class standard.

For the application of section 14B.2.3.1 an asterisk, where appearing in table 2, except for category (9), should be read as "A-0".

14B.2.6 Protection of stairways and lifts in accommodation and service spaces

14B.2.6.1 A stairway should be of steel frame construction except where The Bahamas Maritime Authority sanctions the use of other equivalent material, and should be within enclosures formed of "A" class divisions, with positive means of closure at all openings, except that —

.1 an isolated stairway which penetrates a single deck only may be protected at one level only, by at least "B" class divisions and self-closing door(s); and

.2 stairways may be fitted in the open in a public space, provided they lie wholly within such public space.

14B.2.6.2 A stairway enclosure should have direct communication with the corridors and be of sufficient area to prevent congestion, having in view the number of persons likely to use them in an emergency. In so far as is practical, stairway enclosures should not give direct access to galleys, machinery

spaces, service lockers, or other enclosed spaces containing combustibles in which a fire is likely to originate.

14B.2.6.3 A lift trunk should be so fitted to prevent the passage of flame from one 'tween-deck to another and should be provided with means of closing to permit the control of draught and smoke.

14B.2.7 Openings in "A" class divisions

14B.2.7.1 Except for hatches between store and baggage spaces, and between such spaces and the weather decks, all openings should be provided with permanently attached means of closing which should be at least as effective for resisting fires as the divisions in which they are fitted.

14B.2.7.2 The construction of all doors and door frames in "A" class divisions, with the means of securing them when closed, should provide resistance to fire as well as the passage of smoke and flame, as far as practical, equivalent to that of the bulkheads in which the doors are situated. Such doors and door frames should be constructed of steel or other equivalent material. Steel watertight doors need not be insulated.

14B.2.7.3 It should be possible for each door to be opened and closed from each side of the bulkhead by one person only.

14B.2.7.4 Fire doors in main vertical zone bulkheads, galley boundaries and stairway enclosures other than power-operated watertight doors and those which are normally locked should satisfy the following requirements —

(a) the doors should be self-closing and be capable of closing with an angle of inclination of up to 3.5° opposing closure;

(b) the approximate time of closure for hinged fire doors should be no more than 40 seconds and no less than 10 seconds from the beginning of their movement with the ship in the upright position. The approximate uniform rate of closure for sliding doors should be of no more than 0.2 m/s and no less than

0.1 m/s with the ship in the upright position;

(c) the doors, except those for emergency escape trunks, should be capable of remote release from the continuously manned central control station, either simultaneously or in groups and should also be capable of release, individually, from a position at the door. Release switches should have an on-off function to prevent automatic resetting of the system;

(d) hold-back hooks not subject to central control station release are prohibited;

(e) a door closed remotely from the central control station should be capable of being re-opened from both sides of the door by local control. After such local opening, the door should automatically close again;

(f) indication must be provided at the fire door indicator panel in the continuously manned central control station whether each door is closed;

(g) the release mechanism should be so designed that the door will automatically close in the event of disruption of the control system or central power supply;

(h) local power accumulators for power-operated doors should be provided in the immediate vicinity of the doors to enable the doors to be operated after disruption of the control system or central power supply at least ten times (fully opened and closed) using the local controls;

(i) disruption of the control system or central power supply at one door should not impair the safe functioning of the other doors;

(j) remote-released sliding or power-operated doors should be equipped with

an alarm that sounds at least 5 seconds but no more than 10 seconds after the door being released from the central control station and before the door begins to move and continues sounding until the door is completely closed;

(k) a door designed to re-open upon contacting an object in its path should re-open not more than 1m from the point of contact;

(l) double-leaf doors equipped with a latch necessary for their fire integrity should have a latch that is automatically activated by the operation of the doors when released by the system;

(m) the components of the local control system should be accessible for maintenance and adjusting;

(n) power-operated doors should be provided with a control system of an approved type which should be able to operate in case of fire and be in accordance with the Fire Test Procedures Code. This system should satisfy the following requirements —

- the control system should be able to operate the door at the temperature of at least 200°C for at least 60 min, served by the power supply;
- the power supply for all other doors not subject to fire should not be impaired; and
- at temperatures exceeding 200°C the control system should be automatically isolated from the power supply and should be capable of keeping the door closed up to at least 945°C.

14B.2.7.5 Where "A" class divisions are penetrated for the passage of electric cables, pipes, trunks, ducts, etc., or for girders, beams or other structural members, arrangements are to be made to ensure that the fire resistance is not impaired.

14B.2.8 Openings in "B" class divisions

14B.2.8.1 Doors and door frames in "B" class divisions and means of securing them should provide a method of closure which should have resistance to fire as far as practical equivalent to that of the divisions except that a ventilation opening may be permitted in the lower portion of such doors. When such an opening is in or under a door the total net area of the opening(s) should not exceed 0.05 m^2. When such an opening is cut in a door it should be fitted with a grill made of non-combustible material. Doors should be non-combustible or of substantial construction.

14B.2.8.2 Where "B" class divisions are penetrated for the passage of electric cables, pipes, trunks, ducts, etc., or for the fitting of ventilation terminals, lighting fixtures and similar devices, arrangements are to be made to ensure that the fire resistance is not impaired.

14B.2.9 Windows and portlights (also see sections 5.4 and 5.5)

14B.2.9.1 All windows and portlights in bulkheads within accommodation spaces, service spaces and control stations should be so constructed to preserve the integrity requirements of the type of bulkheads in which they are fitted.

14B.2.9.2 Glass is not to be installed as an interior main vertical zone, stairway enclosure bulkhead, or within machinery space boundaries.

14B.10 Details of construction

14B.2.10.1 In accommodation and service spaces, control stations, corridors and stairways —

.1 air spaces enclosed behind ceilings, panelling or linings should be suitably divided by close-fitting draught stops not more than 14m part; and

.2 in the vertical direction, enclosed air spaces, including those behind linings of stairways, trunks, etc. should be closed at each deck.

14B.2.10.2 The draught stops are to be non-combustible and are to form a continuation above the ceiling of the bulkhead below or the other side of the panelling or lining to the bulkhead, as far as possible.

14B.2.10.3 Where the structure or "A" class divisions are required to be insulated, it is to be ensured that the heat from a fire is not transmitted through the intersections and terminal points of the divisions or penetrations to uninsulated boundaries. Where the insulation installed does not achieve this, arrangements are to be made to prevent this heat transmission by insulating the horizontal and vertical boundaries or penetrations for a distance of 450 mm.

14B.2.10.4 Without impairing the efficiency of the fire protection, the construction of ceilings and bulkheads should allow a fire patrol to detect any smoke originating in concealed and inaccessible places, except where there is no risk of fire originating in such places.

14B.2.10.5 When gaseous fuel is used for domestic purposes, the arrangements for the storage, distribution and utilisation of the fuel should be such that, having regard to the hazards of fire and explosion which the use of such fuel may entail, the safety of the vessel and the persons onboard are preserved.

In particular, open flame gas appliances provided for cooking, heating or any other purposes, should comply with the requirements of International standards and the installation of open flame gas appliances should comply with the appropriate provisions of section 14A.5.

14B.2.11 Restricted use of combustible materials

14B.2.11.1 Except in spaces protected by an automatic sprinkler system and fully addressable fire detection system in accordance with section 14B.2.14, all linings, grounds and ceilings should be of non-combustible materials.

14B.2.11.2 The use of combustible materials is to be kept to a minimum. Insulation materials should be non-combustible.

14B.2.11.3 The following surfaces should be low flame spread —

.1 exposed surfaces in corridors and stairway enclosures, and of bulkheads, wall and ceiling linings in all service spaces and control stations; and

.2 concealed or inaccessible spaces in accommodation, service spaces and control stations.

As an alternative to .1 and .2 above, these spaces may contain surfaces that are not low flame spread, provided —

.3 adequate barriers of low flame spread surfaces are arranged to restrict the spread of flame areas at distances not greater than 5m; or

.4 these spaces are protected by an automatic sprinkler system and fully addressable fire detection system in accordance with section 14B.2.14.

14B.2.11.4 Pipes penetrating "A" or "B" class divisions are to be of approved materials having regard to the temperature such divisions are required to withstand.

14B.2.11.5 Pipes conveying oil or combustible liquids through accommodation and service spaces are to be of approved materials having regard to the fire risk.

14B.2.11.6 Materials readily rendered ineffective by heat are not to be used for overboard scuppers, sanitary discharges, and other outlets which are close to the waterline and where the failure of the material in the event of fire would give rise to the danger of flooding.

14B.2.11.7 Furniture in the corridors and escape routes should be of a type and quantity not likely to obstruct access. Additionally, furniture along escape routes should be secured in place to prevent shifting if the vessel rolls or lists.

14B.2.11.8 Primary deck coverings within accommodation spaces, service spaces and control stations are to be of a type which will not readily ignite, or give rise to toxic or explosive hazards at elevated temperatures. Reference is also to be made to the IMO FTP Code, Annex 1, Parts 2 and 6.

14B.2.11.9 Vapour barriers and adhesives used in conjunction with insulation, as well as insulation of pipe fillings for cold service systems need not be non-combustible, but they should be kept to the minimum quantity practicable and their exposed surfaces should have low flame spread characteristics.

14B.2.11.10 Except when a fully addressable fire detection system is fitted, upholstery composites (fabric in association with any backing or padding material) used throughout the vessel should be approved in accordance with the IMO FTP Code, Annex 1, Part 8 or an equivalent standard acceptable to The Bahamas Maritime Authority.

14B.2.11.11 Except when a fully addressable fire detection system is fitted, bedding components should be approved in accordance with the IMO FTP Code, Annex 1, Part 9 or an equivalent standard acceptable to The Bahamas Maritime Authority.

14B.2.11.12 Except when a fully addressable fire detection system is fitted suspended textile materials such as curtains and drapes should be approved in accordance with the IMO FTP Code, Annex 1, Part 7, or an equivalent standard acceptable to The Bahamas Maritime Authority.

14B.2.11.13 Upholstery, bedding components and suspended textiles required to comply with the IMO FTP Code or an equivalent standard are to be clearly labelled by the manufacturer stating the standard that they meet and any washing or cleaning instructions needed to maintain their fire resistance. These labels are not to be removed.

14B.2.11.14 In spaces where penetration of oil products is possible, the surface of insulation is to be impervious to oil or oil vapours. Insulation boundaries are to be arranged to avoid immersion in oil spillages so far as is practicable.

14B.2.12 Means of escape

Purpose

The purpose of this section is to provide means of escape so that persons onboard can safely and swiftly escape to the lifeboat and life raft embarkation deck. For this purpose, the following functional requirements should be met —

- safe escape routes should be provided;
- escape routes should be maintained in a safe condition, clear of obstacles; and
- additional aids for escape should be provided as necessary to ensure accessibility, clear marking, and adequate design for emergency situations.

14B.2.12.1 Stairways and ladders should be arranged to provide ready means of escape to the lifeboat and life raft embarkation deck from all guest and crew accommodation spaces and service spaces in which the crew are normally employed, other than machinery spaces. In particular, the following provisions should be complied with —

.1 Below the bulkhead deck, two means of escape, at least one of which should be independent of watertight doors, should be provided from each watertight compartment, main vertical zone or similarly restricted group of spaces. Exceptionally one of the means of escape may be dispensed with, due regard being paid to the nature and location of spaces and to the number of persons who might normally be accommodated or employed there.

.2 Above the bulkhead deck, there are to be at least two means of escape from each vertical fire zone or similarly restricted spaces or group of spaces, at least one of which is to give access to a readily accessible escape which will provide continuous fire shelter from the level

of its origin to the appropriate survival craft embarkation deck.

.3 Within each main vertical zone there should be at least one readily accessible enclosed stairway providing continuous fire shelter, where practical, at all levels up to the appropriate lifeboat and life raft embarkation decks or the highest level served by the stairway, whichever level is the highest. The width, number and continuity of the stairways should be satisfactory for the number of persons likely to use them.

.4 Access from the stairway enclosures to the lifeboat and life raft embarkation areas should avoid high fire risk areas.

.5 Stairways serving only a space and a balcony in that space should not be considered as forming one of the required means of escape.

.6 If a radio room or wheelhouse has no direct access to the open deck, two means of escape should be provided, one of which may be a window of sufficient size or another means.

.7 Stairways are not to exceed 3.5m vertical rise without the provision of a landing.

.8 In the case where direct access to the appropriate survival craft embarkation deck as required by .1 and .2 is not practical, a ready accessible escape which will provide continuous fire shelter from the level of its origin to the appropriate open deck with subsequent direct passage to the embarkation deck can be accepted provided that these escape routes including external staircases, have emergency lighting and slip free surfaces under foot.

.9 Protection of access from the stairway enclosures to the lifeboat and life raft embarkation areas should be provided either directly or through protected internal routes which have fire integrity and insulation values for stairway enclosures as determined by tables 1 and 2, as appropriate.

.10 Where public spaces span three or more open decks and contain combustibles such as furni-

ture and give access to other enclosed spaces, each level within the space is to have two means of escape, one of which is to give access to a readily accessible escape which will provide continuous fire shelter from the level of its origin to the appropriate survival craft embarkation deck.

14B.2.12.2 Two means of escape should be provided from each machinery space. In particular, the following provisions should be complied with —

.1 The two means of escape should consist of either —

(a) two sets of steel ladders as widely separated as possible, leading to doors in the upper part of the space similarly separated and from which access is provided to the appropriate survival craft embarkation decks. One of these ladders should provide continuous fire shelter from the lower part of the space to a safe position outside the space. This shelter is to be of steel or equivalent material, insulated where necessary, and provided with a self-closing door at the lower end. If access is provided at other levels each level is to be provided with a steel or equivalent material self-closing door; or

(b) one steel ladder leading to a door in the upper part of the space from which access is provided to the embarkation deck and additionally, in the lower part of the space and in a position well separated from the ladder referred to, a steel door capable of being operated from each side and which provides access to a safe escape route from the lower part of the space to the embarkation deck.

.2 One of the means of escape from any such space required by section 14B.2.12.2.1 may be dispensed with on sailing vessels with small machinery spaces, so long as either a door or a steel ladder and walkways provide a safe

escape route to the embarkation deck with due regard being paid to the nature and location of the space and whether persons are normally employed in that space.

.3 Two means of escape should be provided from a machinery control room located within a machinery space, at least one of which should provide continuous fire shelter to a safe position outside the machinery space.

14B.2.12.3 Lifts should not be considered as forming one of the required means of escape.

14B.2.12.4 In exceptional circumstances a single means of escape may be accepted for spaces other than accommodation spaces that are entered only occasionally, if the escape route does not pass through a galley, machinery space or watertight door.

14B.2.12.5 Adequate deck area is to be provided at assembly stations and embarkation areas having due regard to the expected number of persons. Generally, assembly stations should be provided close to the embarkation stations. Each assembly station should have sufficient clear deck space to accommodate all persons assigned to assemble at that station, but at least 0.35 m^2 per person.

14B.2.12.6 Emergency Escape Breathing Devices

Emergency escape breathing devices (EEBDs) should comply with the Fire Safety Systems Code. At least one spare emergency escape breathing device should be kept onboard.

14B.2.12.6.1 All vessels should carry at least two EEBDs within accommodation spaces, and at least two EEBDs should be carried in each main vertical zone.

14B.2.12.6.2 On all vessels, within the machinery spaces, EEBDs should be situated ready for use at easily visible locations, which can be reached quickly and easily at any time in the event of fire. The number and location should take into account the layout of the machinery space and the number of persons normally working in the space. The number and location of these devices should be indicated in the fire control plan.

14B.2.13 Ventilation Systems

14B.2.13.1 Ventilation ducts should be of non-combustible material. Short ducts, however, not generally exceeding 2m in length and with a cross-section not exceeding 0.02 m^2 need not be non-combustible, subject to the following conditions —

.1 they should be of a suitable material having regard to the risk of fire;

.2 they should be used only at the end of the ventilation device; and

.3 they should not be situated less than 600 mm, measured along the duct, from an opening in an "A" or "B" class division including continuous "B" class ceilings.

14B.2.13.2 Where ventilation ducts with a free cross-sectional area exceeding 0.02 m^2 pass through class "A" bulkheads or decks, the opening should be lined with a steel sheet sleeve unless the ducts passing through the bulkheads or decks are of steel in the vicinity of passage through the deck or bulkhead and the ducts and sleeves should comply in this part with the following —

.1 Sleeves should have a thickness of at least 3 mm and a length of at least 900 mm. When passing through bulkheads, this length should be divided preferably into 450 mm on each side of the bulkhead. The ducts, or sleeves lining such ducts, should be provided with fire insulation. The insulation should have at least the same fire integrity as the bulkhead or deck through which the duct passes.

.2 Ducts with a free cross-sectional area exceeding 0.075 m^2 should be fitted with fire dampers in addition to the requirements of .1 above. The fire damper should operate automatically but should also be capable of being closed manually from both sides of the bulk-head or deck. The damper should be provided with an indicator which shows whether the damper

is open or closed. Fire dampers are not required, however, where ducts pass through spaces surrounded by "A" class divisions, without serving those spaces, provided those ducts have the same fire integrity as the divisions which they pierce.

14B.2.13.3 Ducts provided for the ventilation of a machinery space of category A, machinery spaces, galley, spaces containing vehicles or craft with fuel in their tanks or lockers storing such fuel, should not pass through accommodation spaces, service spaces or control stations unless they comply with the conditions specified in .1 to .4 or .5 and .6 below —

.1 they are constructed of steel having a thickness of at least 3 mm and 5 mm for duct widths or diameters of up to and including 300 mm and 760 mm and over respectively and, in the case of ducts with widths or diameters between 300 mm and 760 mm, thickness should be obtained by interpolation;

.2 they are suitably supported and stiffened;

.3 they are fitted with automatic fire dampers close to the boundaries penetrated; and

.4 they are insulated to "A-60" standard from a machinery space or galley to a point at least 5m beyond each fire damper;

OR

.5 they are constructed of steel in accordance with .1 and .2 above; and

.6 they are insulated to "A-60" standard throughout accommodation spaces, service spaces or control stations; except that penetrations of main zone divisions should also comply with the requirements of section 14B.2.13.8.

14B2.13.4 Ducts provided for ventilation to accommodation spaces, service spaces or control stations should not pass through a machinery space of category A machinery spaces, galley, spaces containing vehicles or craft with fuel in their tanks or lockers storing such fuel, unless they comply with the

conditions specified in .1 to .3 or .4 and .5 below —

.1 where they pass through a machinery space of category A or galley; ducts are constructed of steel in accordance with sections 14B.2.13.3.1 &.2;

.2 automatic fire dampers are fitted close to the boundaries penetrated; and

.3 the integrity of the machinery space or galley boundaries is maintained at penetrations;

OR

.4 where they pass through a machinery space of category A or galley, ducts are constructed of steel in accordance with sections 14B,2.13,3.1 & ,2; and

.5 within a machinery space or galley, ducts are insulated to "A-60" standard; except that penetrations of main zone divisions should also comply with the requirements of section 14B.2.13.8.

14B.2.13.5 Ventilation ducts with a free cross-sectional area exceeding 0.02 m^2 passing through "B" class bulkheads should be lined with steel sheet sleeves of 900 mm in length divided preferably into 450 mm on each side of the bulkheads, unless the duct is of steel for this length.

14B.2.13.6 For a control station outside machinery spaces and other normally manned control stations, practical measures should be taken to ensure that ventilation, visibility and freedom from smoke are maintained so that, in the event of fire, the machinery and equipment contained in the control station may be supervised and continue to function effectively. Alternative and separate means of air supply should be provided; air inlets of the two sources of supply should be so disposed that the risk of both inlets drawing in smoke simultaneously is minimized. These requirements need not apply to control stations situated on, and opening on to, an open deck, or where local closing arrangements would be equally effective.

14B.2.13.7 Exhaust duct(s) from a galley range should be constructed of "A" class divisions where passing through accommodation spaces and/or spaces containing combustible materials. In addition to the requirements of section 14B.2.13.3 an exhaust duct should be fitted with —

.1 a grease trap readily removable for cleaning;

.2 a fire damper located in the lower end of the duct;

.3 arrangements for shutting off the exhaust fans, operable from within the galley; and

.4 fixed means for extinguishing a fire within the duct.

14B.2.13.8 When it is necessary for a ventilation duct to pass through a main vertical zone division, a fail-safe automatic closing fire damper should be fitted adjacent to the division. The damper should also be capable of being manually closed from each side of the division. The operating position should be readily accessible and be marked in red light-reflecting colour. The duct between the division and the damper should be of steel or other equivalent material and, if necessary, insulated to comply with the requirements of SOLAS regulation II/9.3.1. The damper should be fitted on at least one side of the division with a visible indicator showing whether the damper is in the open position.

14B.2.13.9 Inlets and outlets of ventilation systems should be capable of being closed from outside the space being ventilated.

14B.2.13.10 Power ventilation of accommodation spaces, service spaces, control stations and machinery spaces should be capable of being stopped from an easily accessible position outside the space being served. This position should not be readily cut off in the event of a fire in the spaces served. The means provided for stopping the power ventilation of a machinery space should be entirely separate from the means provided for stopping ventilation of other spaces.

14B.2.13.11 Where public spaces span three or more open decks and contain combustibles such as furniture

and other enclosed spaces, the space is to be equipped with a smoke extraction system. The smoke extraction system is to be activated by the smoke detection system required by section 14B.2.14 and is to be capable of manual control. The fans are to be capable of exhausting the entire volume within the space in not more than 10 minutes.

14B.2.13.12 Store-rooms containing highly flammable products are to be provided with ventilation arrangements that are separate from other ventilation systems. Ventilation is to be arranged to prevent the build up of flammable vapours at high and low levels. The inlets and outlets of ventilators are to be positioned so that they do not draw from or vent into an area which would cause undue hazard, and are to be fitted with spark arresters.

14B.2.13.13 Ventilation systems serving category A machinery spaces are to be independent of systems serving other spaces.

14B.2.13.14 All enclosed spaces containing free standing fuel tanks are to be ventilated independently of systems serving other spaces.

14B.2.13.15 Ventilation is to be provided to prevent the accumulation of dangerous concentrations of flammable gas which may be emitted from batteries.

14B.2.13.16 Ventilation openings may be fitted in and under the lower parts of cabin and public space doors in corridor bulkheads. The total net area of any such openings is not to exceed 0.05 m^2.

14B.2.13.17 For spaces containing vehicles or craft with fuel in their tanks or lockers storing such fuels, see 14B.2.1 For additional requirements for the ventilation of domestic gaseous fuel, see section 14B.2.20.

14B.2.13.18 Ducts provided for exhaust ventilation from laundries are to be fitted with suitable located cleaning and inspection openings.

14B.2.13.19 All fire dampers should comply with IMO FTP Code, Annex 1, Part 3.

14B.2.14 Fixed fire detection and fire alarm systems and automatic sprinkler, fire detection and fire alarm systems —

Purpose

The purpose of this section is to provide for detection of a fire in the space of origin and to provide for alarm for safe escape and fire-fighting activity. For this purpose, the following functional requirements should be met —

- fixed fire detection and fire alarm system installations should be suitable for the nature of the space, fire growth potential and potential generation of smoke and gases; and
- manually operated call points should be placed effectively to ensure a readily accessible means of notification.

14B.2.14.1 Each separate zone in all accommodation and service spaces, except spaces which afford no substantial fire risk such as void spaces, sanitary spaces, etc., should be provided throughout with an automatic sprinkler, fire detection and fire alarm system of an approved type and complying with the requirements of SOLAS, Part C. regulation II-2/7 and the IMO FSS Code. Chapter 8. or an equivalent standard acceptable to The Bahamas Maritime Authority. The system should be designed to enable simultaneous operation of all sprinklers fitted in the most hydraulically demanding area. The minimum area for simultaneous operation may be taken as the largest area bounded by "A-0" class divisions, bulkheads or the breadth of the vessel squared, whichever is the greater. In addition, a fixed fire detection and fire alarm system of an approved type complying with the requirements of SOLAS II-2/7 and the IMO FSS Code, Chapter 9 should be installed and arranged to provide smoke detection in corridors, stairways and escape routes within accommodation spaces;

14B.2.15 Fire detection and alarms

14B.2.15.1 Manually operated call points complying with the requirements of SOLAS II-2/7 and the IMO FSS Code, chapter 9 should be installed.

14B.2.15.2 For vessels having a freeboard length of 85m or more, a public address system complying with the requirements of SOLAS III/6.5 is to be available throughout the accommodation and service spaces and control stations and open decks.

14B.2.16 Oil fuel arrangements

14B.2.16.1 Arrangements for the storage, distribution and utilisation of oil fuel are to be such as to minimise the risk of fire or explosion.

14B.2.16.2 As far as practicable, oil fuel tanks are to be part of the vessel's structure and are to be located outside category A machinery spaces.

14B.2.16.3 Where oil fuel tanks, other than double bottom tanks, are necessarily located adjacent to or within category A machinery spaces, at least one of their vertical sides is to be contiguous to the machinery space boundaries, and is preferably to have a common boundary with the double bottom tanks, and the area of the tank boundary common with the machinery spaces is to be kept to a minimum. Where the vertical boundary of a tank directly exposed to a machinery space meets the vessel's side plating at an acute angle, a small horizontal surface at the base of the tank, necessary to accommodate practical constructional considerations may be permitted. If the arrangement of the machinery is such that a tank with a large horizontal surface at the base is necessary then a cofferdam with suitable ventilation arrangements, to protect the base of the tank from the effect of a machinery space fire, will be specially considered. Oil fuel tanks situated within the boundaries of category A machinery spaces are not to contain oil fuel having a flashpoint of less than 60°C. Except for vessels constructed of materials other than steel, where steel tanks should be provided, the use of free standing oil fuel tanks is prohibited.

14B.2.17 Lubricating oil arrangements

Arrangements for the storage, distribution and utilisation of oil used in pressure lubrication systems are to be such as to minimise the risk of fire or explosion.

14B.2.18 Arrangements for other flammable oils

Arrangements for the storage, distribution and utilisation of other flammable oils employed under pressure in power transmission systems, control and activating systems and heating systems are to be such as to minimise the risk of fire or explosion.

14B.2.19 Prohibition of carriage of flammable oils in forepeak tanks

Oil fuel, lubricating oil and other flammable oils are not to be carried in forepeak tanks.

14B.2.20 Arrangements for gaseous fuel for domestic purposes

Where gaseous fuel is used for domestic purposes, the arrangements for the storage, distribution and utilisation of the fuel are to be such that, having regard to the hazards of fire and explosion which the use of such fuel may entail, the safety of the vessel and the persons on board is preserved. The installation is to be in accordance with recognised National or International Standards and is to meet the requirements contained in section 14A.5.

14B.2.21 Space heaters

Space heaters, if used, are to be fixed in position and constructed so as to reduce fire risks to a minimum. The design and location of these units is to be such that clothing, curtains or other similar materials cannot be scorched or set on fire by heat from the unit.

15A FIRE APPLIANCES - VESSELS OF LESS THAN 500 GT

15A.1 General Requirements

15A.1.1 Fire appliances are to be of an approved type and should be provided to meet the minimum requirements listed in table 1 and the specific requirements of section 15A.2.

15A.1.2 Fire appliances provided in addition to those required by section 15A.1.1 should be of a type acceptable to The Bahamas Maritime Authority.

15A.1.3 The location of concealed fire appliances should be clearly marked.

Table 1 – FIRE APPLIANCES - VESSELS OF LESS THAN 500 GT

1	PROVISION OF WATER JET - sufficient to reach any part of vessel	1
2	POWER DRIVEN FIRE PUMP - engine or independent drive	1
3	ADDITIONAL INDEPENDENT POWER DRIVEN FIRE PUMP, POWER SOURCE AND SEA CONNECTION - not located in the same space as item 2	1
4	FIREMAIN & HYDRANTS -	Sufficient to achieve item 1 with a single length of hose
5	HOSES - with jet/spray nozzles each fitted with a shut-off facility	3
6	FIRE EXTINGUISHERS - portable, (accommodation and service spaces)	For each deck, 1 within 10m of any position within an accommodation or service space
7	FIRE EXTINGUISHERS - for a machinery space containing internal combustion type machinery - the options are: (a) a fixed fire extinguishing system approved in accordance with the IMO Fire Safety Systems Code; and (b) (i) 1 portable extinguisher for oil fires for each 74.6 kW power; or (ii) 2 portable extinguishers for oil fires together with either - 1 foam extinguisher of 45L capacity; or 1 CO_2 extinguisher of 16 kg capacity	 7 (max) 2 + 1
8	FIREMANS OUTFIT - to include an approved breathing apparatus	2[1]
9	FIRE BLANKET - in galley	1

Notes:

1 A minimum of two breathing apparatus are to be provided. In vessels where stowage considerations do not allow the carriage of two apparatus, proposals to carry a single unit should be agreed with The Bahamas Maritime Authority.

15A.2 Specific Requirements

15A.2.1 Provision of water jet

At least one jet of water, from a single length of hose, should be able to reach any part of the vessel normally accessible to passengers or crew while the vessel is being navigated and, any store room and any part of a storage compartment when empty.

15A.2.2 Fire pumps

15A.2.2.1 The power driven fire pump should have a capacity of

$$2.5x\{1+0.066x(L(B+D))^{0.5}\}^2 \ m^3/hour$$

where —

L is the length

B is the greatest moulded breadth

D is the moulded depth measured to the bulkhead deck at amidships.

When discharging at full capacity through 2 adjacent fire hydrants, the pump should be capable of maintaining a water pressure of 0.2 N/mm^2 at any hydrant, provided the fire hose can be effectively controlled at this pressure.

15A.2.2.2 The second fire pump, which may be portable, should have a capacity of at least 80% of that required by section 15A.2.2.1 and be capable of input to the fire main. A permanent sea connection, external to the machinery space, should be provided. "Throw-over" sea suctions are not acceptable.

15A.2.2.3 Each centrifugal fire pump should be provided with a non-return valve in the connection to the fire main.

15A.2.3 Fire main and hydrants

15A.2.3.1 A fire main, water service pipes and fire hydrants should be fitted.

15A.2.3.2 The fire main and water service pipe connections to the hydrants should be sized for the maximum discharge rate of the pump(s) connected to the main.

15A.2.3.3 The fire main, water service pipes and fire hydrants should be constructed such that they will —

.1 not be rendered ineffective by heat;

.2 not readily corrode; and

.3 be protected against freezing.

15A.2.3.4 When a fire main is supplied by 2 pumps, 1 in the machinery space and 1 elsewhere, provision

should be made for isolation of the fire main within the machinery space and for the second pump to supply the fire main and hydrants external to the machinery space. Isolation valve(s) should be manually operated valves fitted outside the machinery space in a position easily accessible in the event of a fire.

15A.2.3.5 The fire main should have no connections other than those necessary for fire fighting or washing down.

15A.2.3.6 Fire hydrants should be located for easy attachment of fire hoses, protected from damage and distributed so that a single length of the fire hoses provided can reach any part of the vessel.

15A.2.3.7 Fire hydrants should be fitted with valves that allow a fire hose to be isolated and removed when a fire pump is operating.

15A.2.4 Fire hoses

15A.2.4.1 Fire hoses should not exceed 18 metres in length and, generally, the diameter of a lined hose for use with a powered pump should not be less than 45 mm.

15A.2.4.2 Fire hoses and associated tools and fittings should be kept in readily accessible and known locations close to the hydrants or connections on which they will be used. Hoses supplied from a powered pump should have jet/spray nozzles (incorporating a shut-off facility) of diameter 19 mm, 16 mm or 12 mm depending on fire fighting purposes. For accommodation and service spaces, the diameter of nozzles need not exceed 12 mm. For machinery spaces and exterior locations, the nozzle size should be as to obtain the maximum discharge possible from two jets at the pressure referred to in section 15A.2.2.1, from the smallest pump.

15A.2.4.3 Hydrants or connections in interior locations on the vessel should have hoses connected at all times. For use within accommodation and service spaces, proposals to provide a smaller diameter of hoses and jet/spray nozzles will be considered.

15A.2.4.4 The number of fire hoses and nozzles provided should correspond to the functional fire safety requirements but, be at least 3.

15A.2.5 Portable fire extinguishers for use in accommodation and service spaces

15A.2.5.1 The number, location, fire extinguishing medium type and capacity should be selected according to the perceived fire risk, but for each deck, one portable extinguisher should be available for use within a distance of 10m from any location. A minimum of at least 3 portable fire extinguishers should be provided. As far as practical, the fire extinguishers provided should have a uniform method of operation and should be of an approved type and capacity.

15A.2.5.2 Portable fire extinguishers of the carbon dioxide type should not be located or provided for use in accommodation spaces.

15A.2.5.3 Except for portable extinguishers provided in connection with a specific hazard within a space when it is manned (such as a galley), portable extinguishers generally should be located external to, but adjacent, to the entrance of the space(s) in which they will be used. Extinguishers should be stowed in readily accessible and marked locations.

15A.2.5.4 Spare charges should be provided onboard for at least 50% of each type and capacity of portable fire extinguisher onboard. When an extinguisher is not of a type which is rechargeable when the vessel is at sea, an additional portable fire extinguisher of the same type (or its equivalent) should be provided.

15A.2.6 Fire extinguishing in machinery spaces

15A.2.6.1 In a machinery space containing internal combustion type machinery fire appliances should be provided at least to the extent listed in item 7 of table 1 - Fire Appliances.

15A.2.6.2 In a machinery space containing an oil fired boiler, oil fuel settling tank or oil fuel unit, a fixed fire extinguishing system complying with the IMO Fire Safety Systems Code should be installed.

15A.2.6.3 Portable fire extinguishers should be installed and the number, location, fire extinguishing medium type and capacity should be selected according to the perceived fire risk in the space. (Spare charges

or spare extinguishers should be provided per section 15A.2.5.4.)

In any case, portable fire extinguishers for extinguishing oil fires should be fitted —

.1 in a boiler room - at least 2;

.2 in a space containing any part of an oil fuel installation - at least 2; and

.3 in a firing space - at least 1.

15B FIRE APPLIANCES - VESSELS OF 500 GT AND OVER

All vessels should comply with the requirements of SOLAS regulation II-2/10 as may be amended and as appropriate to the vessel and its equipment. For the purpose of the SOLAS regulations the standards for a cargo ship apply.

In no case should the standards applied be less than those applied to a vessel of less than 500 GT.

The location of concealed fire appliances should be clearly marked.

16 RADIO

16.1 General

16.1.1 All vessels regardless of size should comply with the requirements of this section.

16.2 Radio Communications: The Global Marine Distress and Safety System (GMDSS)

16.2.1 Each vessel should carry sufficient radio equipment to perform the following distress and safety communications functions throughout its intended voyage —

.1 transmitting ship to shore distress alerts by at least two separate and independent means, each using a different radiocommunication service;

.2 receiving shore-to-ship distress alerts;

.3 transmitting and receiving ship-to-ship distress alerts;

.4 transmitting and receiving search and rescue co-ordinating communications;

.5 transmitting and receiving on-scene communications;

.6 transmitting and receiving signals for locating by radar;

.7 transmitting and receiving maritime safety information;

.8 transmitting and receiving bridge-to-bridge communications;

.9 transmitting and receiving appropriate security communications.

16.2.2 Radio installations

16.2.2.1 Table 1 illustrates the radio installations to be carried to fulfil the functional requirements sailing at different distances from a safe haven.

Table 1

Radio Equipment	Distance from safe haven - nautical miles			
	Up to 30	Up to 60	Up to 150	Unlimited
VHF Radiotelephone with Digital Selective Calling (DSC)	One	One	One	One
MF/HF Radiotelephone with Digital Selective Calling (DSC)	None	None	One[1]	One[1]
INMARSAT Ship Earth Station	None	None	One[1]	One[1]
NAVTEX 2 receiver	None	None	One[2]	One[2]
LRIT	See section 16.3 below			

Notes for table 1:

1. An INMARSAT ship earth station OR an MF/HF radiotelephone with DSC may be fitted for operations over 60 miles from a safe haven. When a vessel operates north of 70° North, or south of 70° South, i.e. polar regions, an INMARSAT Ship Earth and MF/HF is required due to lack of coverage also, IRIDIUM is recommended.

2. If the vessel is sailing in an area where an international NAVTEX service is not provided then the NAVTEX receiver should be substituted by a supplemented enhanced group calling system.

16.2.2.2 Example

As an illustration, the minimum equipment to be installed on a vessel engaged on world-wide operations south of 70° North and north of 70° South would be;

one VHF radiotelephone with DSC;

one INMARSAT-C ship earth station;

one NAVTEX receiver.

Note also the requirement for the carriage of two way radiotelephone sets, EPIRBs and SARTs given in section 13, table 1. LRIT is noted below.

16.2.3 Operational Performance

16.2.3.1 All required radio communications equipment should be of a type which is approved by the relevant authority.

16.2.4 Installation

16.2.4.1 The radio installation should —

.1 be so located to ensure the greatest possible degree of safety and operational availability;

.2 be protected against harmful effect of water, extremes of temperature and other adverse environmental conditions;

.3 be clearly marked with the call sign, the vessel station identity and any other codes applicable to the use of the radio installation.

16.2.5 Sources of energy

16.2.5.1 There should be available at all times, while the vessel is at sea, a supply of electrical energy sufficient to operate the radio installations and to charge any batteries used as part of a reserve source or sources of energy for the radio installations.

16.2.5.2 A reserve source of energy, independent of the propelling power of the vessel and its electrical system, should be provided for the purpose of conducting distress and safety radio communications for a minimum of one hour in the event of failure of the vessel's main and emergency sources of electrical power (3 hours minimum).

An independent reserve source of energy should be provided for the purpose of conducting distress and safely radio communications for a minimum of 1 hour in addition to that provided by the emergency source of electrical power.

16.2.5.3 When a reserve source of energy consists of a rechargeable accumulator battery, a means of automatically charging such batteries should be provided which is capable of recharging them to minimum capacity requirements within 10 hours.

16.2.5.4 The siting and installation of accumulator batteries should ensure the highest degree of service and safety.

16.2.6 Watches

16.2.6.1 A vessel, while at sea, should maintain a continuous watch —

.1 where practicable, on VHF channel 16;

.2 where practicable, on VHF channel 13;

.3 on VHF Digital Selective Calling (DSC), on channel 70;

.4 if fitted with an MF/HF radiotelephone, on the distress and safety DSC frequency 2187.5 kHz;

.5 for satellite shore-to-ship distress alerts if fitted with a radio facility for reception of maritime safety information by the INMARSAT enhanced group calling system;

.6 for broadcasts of maritime safety information on the appropriate frequency or frequencies on which such information is broadcast for the area in which the vessel is navigating; normally using the International NAVTEX service or the INMARSAT enhanced group calling facility. (Further information may be obtained from the Admiralty List of Radio Signals volume 5).

16.2.7 Radio Personnel

A vessel should carry at least one person qualified for distress and safety radio communication purposes, who should hold a certificate of competence acceptable to the relevant authority.

16.3 Long Range Identification and Tracking of Ships (LRIT)

16.3.1 The LRIT requirements, as detailed in Bulletin No 111, as amended, are applicable on all commercial yachts of 300 GT and above.

16.3.2 Commercial yachts between 300 GT and 499 GT, which have not been issued a Cargo Ship Safety Radio Certificate, should demonstrate compliance with the LRIT requirements by having onboard a valid Conformance Test Report. Neither the Cargo Ship Safety Radio Certificate nor the record of equipment for the Cargo Ship Safety Radio Certificate should be amended in any way to document compliance with the obligation to transmit LRIT information.

16.3.3 Yachts of 300 GT and above that operate exclusively in a GMDSS A1 sea area and are fitted with AIS are not required to install LRIT.

16.3.4 There is a provision, as detailed in Bulletin No. 111, for an exemption or equivalent arrangement if a yacht engages in an isolated international voyage outside the GMDSS A1 sea area.

17 NAVIGATION LIGHTS, SHAPES AND SOUND SIGNALS

17.1 Every vessel should comply with the requirements of the International Regulations for Preventing Collisions At Sea, 1972, as amended.

17.2 All navigation lights should be provided with main and emergency power supply.

17.3 With due regard to accessibility the requirement for duplication for navigation lights required to be shown whilst underway may be satisfied by having a spare lamp that can be easily fitted within three minutes.

17.4 For vessels where compliance is impracticable, alternatives may be considered by making application to The Bahamas Maritime Authority

18 NAVIGATIONAL EQUIPMENT AND VISIBILITY FROM WHEELHOUSE

18.1 Navigational Equipment

18.1.1 A vessel should be fitted with the following —

.1 A properly adjusted standard magnetic compass or other means, independent of any power supply, to determine the ship's heading.

.2 In a steel vessel, it should be possible to correct the compass for co-efficients B, C and D, and heeling error.

.3 The magnetic compass or repeater should be so positioned as to be clearly readable by the helmsman at the main steering position. It should also be provided with an electric light, the electric power supply of which should be of the twin wire type.

18.1.2 A vessel should be fitted with, the following additional equipment —

.1 an echo sounder;

.2 a receiver for a global navigation satellite system or a terrestrial radio-navigation system, or other means suitable for use at all times throughout the intended voyage to establish and update the ship’s position by automatic means;

.3 a distance measuring log;

.4 a gyro-compass or spare magnetic compass bowl;

.5 a rudder angle indicator; and

.6 a 9 GHz radar.

18.1.3 For vessels of less than 300 GT the equipment specified in sections 18.1.1 and 18.1.2 need not be of an approved type.

18.1.4 Means should be provided for taking bearings as near as practicable over an arc of the horizon of 360°. This requirement may be met by the fitting of a pelorus compass or, on a vessel other than a steel vessel, with a hand bearing compass.

18.1.5 For vessels under 300 GT the requirements of section 18.1.2.4 may be met by the use of a fluxgate compass, provided that a suitable back up power supply is available to power the compass in the event of failure of the main electrical supply. Where such a compass incorporates a capability to measure magnetic deviation by undertaking a calibration routine, and where the deviation figures are recorded within the device, a deviation card is not required.

18.1.6 Attention should be paid to magnetic effects on magnetic compasses, including fluxgate compasses, when operating in Polar Regions, (i.e. north of 70° North, or south of 70° South).

18.1.7 All vessels of 300 GT and over shall be fitted with an approved Automatic Identification System (AIS) in accordance with SOLAS Chapter V. The AIS shall —

.1 provide automatically, to appropriately equipped shore stations, other ships and aircraft, information including the ships identity, type, position, course, speed, navigational status and other safety related information;

.2 receive automatically, such information from similarly fitted ships;

.3 monitor and track ships; and

.4 exchange data with shore-based facilities.

18.2 Bridge Visibility

18.2.1 Navigation bridge visibility should comply with SOLAS Chapter V. Vessels less than 45m in length should comply as far as reasonable and practicable.

18.2.2 Windows may be inclined from the vertical plane provided that, where necessary, appropriate measures are taken to avoid adverse reflections from within.

18.2.3 Windows to the navigating position should not be of either polarised or tinted glass (see section 5.5.8). Portable tinted screens may be provided for selected windows.

19 MISCELLANEOUS EQUIPMENT

19.1 Nautical Publications

Every vessel should carry nautical charts and nautical publications to plan and display the ship's route for the intended voyage and to plot and monitor positions throughout the voyage.

An electronic chart system may be accepted as meeting these chart carriage requirements. For vessels of 300 GT and over this system is to be of an approved type Electronic Chart Display and Infor-mation System (ECDIS) (see The Bahamas Maritime Authority Information Bulletin No. 51).

Back-up arrangements to meet these functional requirements should be provided where this function is partly or fully filled by electronic means: this means single ECDIS and paper charts or duplicate ECDIS.

19.2 Measuring Instruments

Every vessel should carry a barometer. Every sailing vessel should carry an anemometer and an inclinometer.

19.3 Signalling Lamp

Every vessel should carry a daylight signalling lamp, or other means to communicate by light during day and night using an energy source of electrical power not solely dependent upon the ship's power supply. The signalling lamp may be the searchlight required by section 19.4.

19.4 Searchlight

Every vessel should carry an efficient fixed or portable searchlight suitable for man-overboard search and rescue operations.

19.5 Vessels of less than 150 GT require a radar reflector.

19.6 Vessels of 300 GT or more must be permanently marked externally with the vessel's IMO number. This number shall be visible on either side of the hull or on the stem or on a horizontal surface visible from the air.

20 ANCHORS AND CABLES

Objective: The purpose of this section is to set out the minimum standard for anchoring and mooring arrangements. It should be noted that this element is to be an integral part of the Classification Process and this should be reflected in the Class Notation.

20.1 Equipment

20.1.1 Vessels will be considered to have adequate equipment if fitted out in accordance with standards for such equipment, set by a Recognised Organisation.

20.1.2 Vessels not equipped in accordance with section 20.1.1 may be specially considered by The Bahamas Maritime Authority, provided full information is submitted for approval.

20.1.3 All vessels are to have at least 2 anchors, one of which must be ready for use at all times. Any powered deployment system should be connected to an emergency power supply or be capable of being manually operated.

20.2 Sailing Vessels

20.2.1 The sizing of anchors and cables for sailing vessels should take into account the additional windage effect of the masts and rigging.

20.2.2 Typically, for square rigged sailing vessels, experience based guidance on approximate increase in anchor mass and cable strength required is —

- for vessels up to 50 metres in length, typically 50% above the requirements for a typical motor vessel having the same total longitudinal profile area of hull and superstructure as the square rigged sailing vessel under con-sideration;
- for vessels 100 metres in length and over, typically 30% above the requirements for a typical motor vessel having the same total longitudinal profile area of hull and superstructure as the square rigged sailing vessel under consideration;
- for a square rigged sailing vessel of between 50 and 100 metres in length, the increase should be obtained by linear interpolation.

21 ACCOMMODATION

21.1 General

21.1.1 An adequate standard of accommodation should be provided to ensure the comfort, recreation, health and safety of all persons on board.

21.1.2 Attention is drawn to the achievement of appropriate standards for means of access and escape, lighting, heating, food preparation and storage, messing, safety of movement about the vessel, ventilation and water services.

21.1.3 Generally, accommodation standards for the crew should be at least equivalent to the standards set by the International Labour Organisation Conventions for crew accommodation in merchant ships. The ILO Convention provisions should be practicable with regard to vessels greater than 500 GT. For smaller vessels, particularly sailing vessels, the standards should be applied where possible. When it is neither reasonable nor practicable to site crew sleeping accommodation amidships or aft, and above the

deepest waterline as required, measures taken to ensure an equivalent level of crew health and safety should be authorised by The Bahamas Maritime Authority. Sleeping accommodation with the deck head lining below the deepest waterline is not permitted. It is recommended that where such accommodation is sited partially below the deepest waterline it should be arranged such that in the event of damage to the watertight compartment in which the accommodation space is situated, the lining should not be immersed.

21.1.4 Crew accommodation should not be sited within hazardous spaces.

The following standards are described by general principles which need to be expanded to meet the requirements which relate to the use and areas of operation of particular vessels.

21.2 Access/Escape Arrangements

See sections 14A.3 and 14B.2.12.

21.3 Lighting

An electric lighting system should be installed which is capable of supplying adequate light to all enclosed accommodation and working spaces. The system should be designed and installed in accordance with section 8.

21.4 Heating

As considered appropriate, an adequate heating installation should be provided.

21.5 Food Preparation, Storage and Messing

The galley floor should be provided with a non-slip surface and provide a good foothold.

All furniture and fittings in the galley shall be made of a material which is impervious to dirt and moisture. All metal parts of furniture and fittings shall be rust resistant.

The ventilation in the galley shall be so arranged as to ensure an adequate supply of fresh air and the efficient discharge of fumes into the open air (see also section 21.7).

When a cooking appliance is gimballed it should be protected by a crash bar or other means to prevent personal injury. Means should be provided to lock the gimbal mechanism.

Means should be provided to allow the cook to be secured in position, with both hands free for working, when the vessel motions threaten safe working.

Secure and hygienic storage for food and garbage should be provided.

A messing area(s) should be provided. Each messing area shall be large enough to accommodate the greatest number of persons likely to use it at any one time.

21.6 Hand Holds and Grab Rails

There should be sufficient hand holds and grab rails within the accommodation to allow safe movement around the accommodation at all times. Stairways should be specially considered.

21.7 Ventilation

Effective means of ventilation should be provided to all enclosed spaces which are entered by personnel.

Mechanical ventilation should be provided to all accommodation spaces on vessels which are intended to make long international voyages or operate in tropical waters. As a minimum, mechanical ventilation should be capable of providing 6 changes of air per hour, when all access and other openings (other than ventilation intakes) to the spaces are closed.

Air conditioning systems are to provide a minimum of 25 m^3 of air per hour, per person accommodated in the ventilated space during normal operating conditions.

Enclosed galleys are to be specially considered, and where air conditioning is not fitted should have, as a minimum, a mechanical supply of 20 fresh air changes per hour and a mechanical exhaust of 30 changes.

21.8 Water Services

An adequate supply of fresh drinking water should be provided and piped to convenient positions throughout the accommodation spaces.

In addition, an emergency reserve supply of drinking water should be carried, sufficient to provide at least 2 litres per person. The installation of fresh water making machines and disinfection arrangements are to be to the acceptance of The Bahamas Maritime Authority. (For the purposes of this, silver ionisation or chlorination would be considered acceptable.)

21.9 Sleeping Accommodation

An appropriately sized bed (bunk or cot) should be provided for every person on board, with due regard for the guidance produced by the International Labour Organization (ILO). Where considered appropriate, means for preventing the occupants from falling out, should be provided.

There shall be no direct access into sleeping rooms from spaces for machinery, galleys, paint rooms or from engine, deck, and other bulk storerooms, drying rooms, communal wash places or water closets.

In crew accommodation, wherever possible, the maximum number of persons per sleeping room is to be two and there should be unobstructed access to at least one side of each bed. Any increase in the maximum number of persons per sleeping room should be authorised by The Bahamas Maritime Authority.

21.10 Toilet Facilities

Adequate sanitary toilet facilities should be provided on board. The facilities should be at least one water closet and one shower for every 8 persons or part thereof, and one wash basin for every 6 persons or part thereof.

In vessels where a sanitary system, including a holding tank, is provided, care should be taken to ensure that there is no possibility of fumes from the tank returning via a toilet should the water seal at the toilet be broken.

21.11 Stowage Facilities for Personal Effects

Adequate stowage facilities for clothing and personal effects should be provided for every person on board.

21.12 Securing of Heavy Equipment

All heavy items of equipment such as ballast, batteries, cooking stove, etc, should be securely fastened in place. All stowage lockers containing heavy items should have lids or doors which are capable of being securely fastened.

22 PROTECTION OF PERSONNEL

22.1 Deckhouses and Superstructures

The structural strength of any deckhouse or superstructure should comply with the requirements of one of the Recognised Organisations listed in the Annex 5. The Bahamas National Annex, as appropriate to the vessel and its areas of operation.

22.2 Bulwarks and Guard Rails

22.2.1 Bulwarks and/or guardrails on all accessible decks should be 1000 mm high except that on vessels built pre 1966 Load Line Convention standards may be 915 mm high. Any opening should not exceed 380 mm. Where no bulwarks are fitted, or bulwark height is less than 230 mm, the lowest opening should not exceed 230 mm. They should be supported at intervals not exceeding 2.2 metres. Intermediate courses of rails or wires should be evenly spaced.

22.2.2 Satisfactory means (in the form of guard rails, life lines, gangways or under-deck passages, etc.) shall be provided for the protection of the crew in getting to and from their quarters, the machinery space and all other areas used in the necessary work of the craft.

22.2.3 Where the function of the vessel would be impeded by the provision of bulwarks and/or guard rails complying with section 22.2.1, alternative proposals detailed to provide equivalent safety for persons on deck should be submitted to the Recognised Organisation for approval by The Bahamas Maritime Authority.

22.3 Safe Work Aloft, Overside, and on the Bowsprit of Sailing Vessels

22.3.1 When access to the rig, bowsprit, or over-side working is required, provision should be made to enable people to work safely, in accordance with national standards (see The Bahamas National Annex).

22.3.2 The arrangements provided should be based on established safe working practices for the type of

vessel. The arrangements may include but not be limited to —

.1 safety nets below the bowsprit;

.2 safety grab-rails or jackstays (metal or wire) fixed along the bowsprit to act as handholds and strong points for safety harnesses;

.3 mandatory use of safety harnesses aloft, over-side, and for work on the bowsprit;

.4 sufficient footropes and horses in wire (or rope) permanently rigged to enable seamen to stand on them whilst working out on the yards or on the bowsprit;

.5 safety jackstays (metal or wire) fixed along the top of the yards, to provide handholds and act as strong points for safety harnesses;

.6 means of safely climbing aloft, such as —

(i) fixed metal steps or ladders attached to the mast; or

(ii) traditional ratlines (rope) or rattling bars (wood/steel), fixed across the shrouds to form a permanent ladder.

22.4 Personal Clothing

It should be the responsibility of an owner/ managing agent/skipper to advise that the following requirements for items of personal clothing should be met —

.1 Each person on board a vessel should have protective clothing appropriate to the prevailing air and sea temperatures.

.2 Each person on board a vessel should have footwear having non-slip soles, to be worn on board.

22.5 Noise

Attention is drawn to the IMO Code on Noise Levels on Board Ships, Resolution A.468 (XII). published 1982.

22.5.1 Vessels covered by this Code should meet the recommendations so far as is reasonable and practicable.

22.5.2 The IMO Code on Noise on Board Ships promotes the control of noise within the framework of internationally agreed guidelines, whilst recommending methods of measuring noise at listening posts.

22.5.3 For safe navigation, it is important that sound signals and VHF communications can be heard, at the navigating position in normal operating conditions.

22.5.4 For machinery spaces, workshops and stores which are manned either continuously or for lengthy periods, the recommended limits are 90 dB(A) for machinery spaces and 85 dB(A) for workshops and stores.

For machinery spaces which are not intended to be continuously manned or are attended for short periods only, the recommended limits are 110 dB(A).

The limits have been set from hearing damage risk considerations and the use of suitable ear protectors.

22.5.5 To indicate the need to wear ear protectors, safety signs, signs with symbols and supplementary warning notices should be displayed at all entrances to spaces in which the noise level exceeds 85 dB(A).

23 MEDICAL STORES

A vessel should carry medical stores as required by The Bahamas Maritime Authority.

Medical stores requirements are detailed in Annex 5, The Bahamas National Annex.

Medical training requirements should comply with the provisions of the STCW Convention, Regulation VI4 and STCW Code, section A-VI/4.

24 SHORE-SHIP TRANSFER OF PERSONNEL

24.1 Tenders (Dinghies)

24.1.1 When a vessel carries a rigid or inflatable tender, it should be fit for its intended use, regularly inspected by the owner/managing agent, and maintained in a safe condition.

24.1.2 Safety equipment should be provided in the tender as appropriate to its intended range and area of operation.

24.1.3 Each tender should be clearly marked with the number of persons (mass 75 kg or, if manufactured after 01 January 2010, 85 kg) that it can safely carry, and the name of the parent vessel.

24.1.4 In the case of petrol-engined tenders, see section 14 for the safety requirements for the carriage of petrol.

24.2 Helicopters

24.2.1 When provision is made for helicopter operations to or from the vessel, the helicopter landing area should be located on an appropriate area of the weather or superstructure deck, or on a purpose built landing area permanently attached to the vessel or structure, providing —

.1 the structural strength of the helicopter landing area is designed and constructed according to Recognised Organisation rules on helicopter landing areas for vessels and a Certificate of Compliance is issued by the relevant Recognised Organisation;

.2 all other considerations such as landing area size, means of access, obstacle protected surfaces (sector clearance zones), lighting, and marking should be in accordance with Annex 6 of this Code with a Helicopter Landing Area Certificate issued by the Aviation Inspection Body;

.3 the requirements for helicopter facilities in SOLAS II-2 are complied with in full;

.4 helicopter operations to/from the vessel are restricted to within the weather, pitch, roll, and heave limits for the vessel as defined where appropriate in the relevant operating rules, and/or in the rotorcraft flight manual (RFM) and/or by the Aviation Inspection Body;

.5 the helicopter landing area is designed for the largest helicopter which it is intended to use; and

.6 the operational procedures for the vessel fully reflect the above

24.2.2 If it is proposed to provide hangar and/or refuelling facilities for a helicopter whilst it is on board the vessel, prior approval should be sought from the Recognised Organisation or The Bahamas Maritime Authority. Such facilities should be arranged in accordance with Annex 6, section 7 and/or 8 of this Code.

24.2.3 In order to meet the full safe landing area size requirement in Annex 6 of this Code, the out-board edges of the landing area may be engineered to retract or fold to a closed position when the landing area is not in use providing the overall safe landing area, including the retractable or movable sides, when fully deployed, provides the minimum load bearing area specified.

24.2.3.1 The minimum safe landing area dynamic load bearing capability should be 2.5 times the Maxi-mum Take-Off Mass (MTOM) of the heaviest helicopter intended to use the landing area. This may only be reduced, subject to agreement from both the Recognised Organisation and The Bahamas Maritime Authority.

24.2.4 The officer(s) in charge of each helicopter landing area operations team should be in possession of an Offshore Petroleum Industry Training Organisation (OPITO) Approved Offshore Helicopter Landing Officer (HLO) Certificate.

All other crew assigned duties within the helicopter landing area operations team(s) should be in possession of an OPITO Approved Offshore Emergency Helideck Team Member Certificate. Certification from an equivalent course approved by the Administration will also be accepted. All helicopter operations certification should be in date.

24.2.5 All crew on board should undergo familiarisation training regarding helicopter operations on board and it is recommended that all crew undertake helicopter crash survivability ("dunker") training at a recognised OPITO training centre, prior to commencement of duties.

24.2.6 Ship to shore and ship to helicopter communi-cations procedures, ship operating procedures, and guidance on helicopter emergencies are out-lined in the International Chamber of Shipping Guide to Helicopter/Ship Operations and should be used as part of the operational procedures of the vessel.

24.3 Pilot for Vessel

Boarding arrangements provided for pilots should have due regard for SOLAS Chapter V, Regulation 23 and IMO Resolution A.889 (21) "Pilot transfer arrangements". International Maritime Pilots'

Association (IMPA) recommendations, or any documents replacing them. Also see Annex 5, The Bahamas National Annex for any national requirements.

24.4 Gangways, Passerelles, and Accommodation Ladders

24.4.1 A safe means of access is to be provided at all times when in port, either deployed or available for deployment. If the safe means of access is not deployed, there shall be a means provided for communication between those on the quay and those on board.

24.4.2 When provided, gangways, passerelles, and accommodation ladders should be manufactured to a recognised national or international standard, and be clearly marked with the manufacturer's name, the model number, the maximum design angle of use and the maximum safe loading (by number of persons and by total weight). Side screens or handrail(s) should be provided on both sides.

24.4.3 Where gangways, passerelles or ladders do not comply with national or international standards, a manufacturer's test load certificate should be provided. Alternatively, practical tests may be carried out to the satisfaction of The Bahamas Maritime Authority. In all cases the maximum design angle, maximum number of persons, and the maximum total weight should be clearly marked, and are to be used in accordance with the manufacturer's instructions.

24.4.4 Accommodation ladders should be provided on a vessel of 120 metres in length and over.

24.4.5 Access equipment and immediate approaches to it should be adequately illuminated.

24.4.6 Reference standards include —

IMO MSG. 1/Circ. 1331 - Gangways and Accommodation Ladders.

ISO 7061:1993 -Shipbuilding - Aluminium shore gangways for seagoing vessels.

ISO 5488:1979 - Shipbuilding - Accommodation ladders.

25 CLEAN SEAS

25.1 Vessels should comply with all the requirements of MARPOL as prescribed by the regulations of The Bahamas Maritime Authority. For vessels under 400 GT, it is the owner's responsibility to comply with local administration/port state requirements and for dealing with oily bilge water retention etc.

25.2 Every ship of 400 GT and above, and every ship which is certified to carry 15 persons or more, should carry a garbage management plan which should include the written procedures agreed for collection, storage, processing and disposal of garbage; and a garbage record book recording disposal and incineration, as outlined in MARPOL, Annex V, regulation 9.

25.3 Special local requirements may exist in national sea areas, ports and harbours. The attention of owners/operators is drawn to the need to comply with local requirements as appropriate.

26 MANNING and PERSONNEL CERTIFICATION

26.1 HOURS OF WORK

26.1.1 Principles of Safe Manning

IMO Resolution A.890(21), as amended, adopted on the 25th November 1999 defines the principles of safe manning to ensure the safe operation, security and prevention of pollution for ships to which the Convention applies. Convention 180 of the International Labour Organization (ILO) (Seafarer's hours of work and the manning of ships) came into force on the 10th January 2003 and applies to all commercially operated vessels. The forthcoming amendments to the STCW Convention will be implemented as appropriate.

The underlying principles of safe manning are considered to extend to large yachts within the context of the Code.

All sea going commercially operated yachts and sail training vessels of more than 24 metres Load Line Length should carry an appropriate number of qualified Deck and Engineer Officers together with a sufficient number of qualified Yacht Ratings to ensure a degree of safety at least equivalent to that established by the IMO guidelines.

26.1.2 Application and Definitions

These guidelines apply to all *"seafarers employed or engaged in any capacity on board every commercially operated large yacht"*.

The term "seafarer", is defined as a person employed or engaged in any capacity on the vessel and should be taken to mean any person employed either directly by an owner/operator or through a manning agency, whose usual place of work is on the vessel and includes the master, officers, crew members, and catering, salon and hotel staff.

26.1.3 Responsibility

Fatigue at sea is a serious safety issue and owners and operators should ensure that all vessels are sufficiently manned to avoid the need to work excessive hours. The owner/operator and the Master are responsible for ensuring, so far as is reasonably practicable, that the Master and all the crew members are properly rested

when they begin work and can obtain adequate rest when not on duty.

The owner/operator should ensure that the necessary resources are available to man the vessel so that the limits on hours can be observed. The master is responsible for ensuring compliance with the requirements.

It is also the responsibility of all seafarers to ensure that they are properly rested when they begin duty on the vessel and that they obtain adequate rest when not on duty.

26.1.4 Definition of Hours of Work

Hours of work is defined as when a seafarer is at their employers' disposal and carrying out their duties or activities.

26.1.5 On-Call Time

Where a seafarer's normal period of rest on board a vessel is disturbed by a call-out he/she should have adequate compensatory rest.

26.1.6 Minimum Hours of Rest

The owner/operator or Master should ensure that the crew are provided with at least the minimum hours of rest. These should not be less than —

(a) ten hours in any 24-hour period; and

(b) 77 hours in any seven-day period.

Hours of rest may be divided into no more than 2 periods; one of which should be at least 6 hours long, and the interval in between should not exceed 14 hours.

It is expected that as far as practicable, the Master will arrange for conducting emergency drills such as musters, fire-fighting and abandon vessel drills in a way which minimises the disturbance to rest periods and provide compensatory rest for sea-farers whose normal rest is disturbed by call-outs for drills.

26.1.7 Exceptions to the Limits on Hours of Rest

The limits defined should as far as practicable be observed. However, exceptions may be considered so long as they are agreed between the Master and crew members, and provided that their health and safety, and the safety of the vessel, is not compromised.

When considering whether an exception is appropriate, the Master should give due regard to the associated duties being considered and in this respect exceptions to persons undertaking watch keeping duties and/or with safety critical duties would not be considered appropriate.

In allowing any such agreed exception and to ensure that a crew member does not become fatigued such exceptions shall be documented and accompanied by commensurate rest arrangements.

26.1.8 Schedule of Duties

The Master should ensure that a schedule of duties is drawn up setting out the hours of work and rest periods for each of the crew. It is recommended that the table or schedule should be in a similar format to that detailed in IMO MSC/Circ.1014 Appendix 2, and show —

- the schedule of duties at sea and duties in port; and
- the minimum hours of rest as defined by the guidelines.

In devising the schedule, operators should take account of factors such as the —

(a) nature of the operation;

(b) type and size of vessel;

(c) construction and technical equipment of the vessel;

(d) manning levels and changes in crew numbers due to crew changes and sickness;

(e) maximum period of continuous watchkeeping;

(f) minimum rest periods;

(g) total workload;

(h) compliance with the IMO ISPS Code as applicable;

(i) seriousness of irregular working hours and their contribution to causing fatigue and the importance of scheduling reasonably stable working hours.

Changes should not be made to the schedule of duties unless they can be justified by substantially altered work patterns or other significant factor.

Where it is known that a vessel engages in an irregular pattern or that working hours are unlikely to be uniform, this can be taken into account when considering the schedule.

It is not necessary to draw up a new schedule of duties for each voyage, so long as it is applicable to the voyage in question and the composition of the crew for whom it was originally intended has not changed.

A copy of the schedule should be made available to all members of the crew.

26.1.9 Exceptions for Emergencies

Situations may arise in which a seafarer may be required to work during scheduled hours of rest. These include emergencies which threaten the safety of the vessel or put life at risk. In these circumstances, the limits may be exceeded provided compensatory arrangements are subsequently made to avoid fatigue.

26.1.10 Records

The master or authorised person is responsible for ensuring that records of hours of rest are maintained for each of the crew serving on the vessel. The records should be completed monthly in arrears. Each record should be endorsed by the master or authorised person and the seafarer. A copy should be retained by the seafarer. The record should be in a similar format to that detailed in IMO MSC/Circ.1014 Appendix 3.

In an emergency, or when unforeseen events occur, changes may be unavoidable. In these cases records should reflect all deviations from the schedule.

All records should be kept for a minimum of 12 months and should be available for inspection by The Bahamas Maritime Authority surveyors at any time. Checking the vessel's records may be carried out by

The Bahamas Maritime Authority as part of the normal routine of vessel inspection and will include a check that the appropriate schedules are available and records maintained.

26.2 SAFE MANNING

26.2.1 Introduction

The Bahamas Maritime Authority requires that all vessels are safely and sufficiently manned in relation to the nature of their operation with the responsibilities placed on companies owning or operating seagoing vessels, to ensure that their vessels are manned with personnel of appropriate grades who have been properly trained and certificated. The numbers of certificated officers and certificated and non-certificated ratings must be sufficient to ensure safe and efficient operation of the vessel at all times.

The Guidelines place a duty on the owner or operator to provide the master of a vessel with the necessary resources to comply with the manning requirements.

26.2.2 Responsibilities of Owners and Operators: General Principles

In fulfilling their responsibility to ensure that vessels are safely and sufficiently manned owners and operators should —

.1 make an assessment of the tasks, duties and responsibilities of the vessel's complement required for its safe operation, for the protection of the marine environment and dealing with emergency situations;

.2 assess the numbers and grades/ capacities in the vessel's complement required for the safe operation and for the protection of the environment, and for dealing with emergency situations, including the evacuation of passengers where applicable;

.3 ensure that the manning level is adequate at all times and in all respects, including meeting peak workloads;

.4 in case of changes in the nature of the operation, operational area, construction, machinery, equipment or maintenance of the vessel, which may

affect the manning level, review the manning level.

In conjunction with these factors the owner or operator should;

.5 identify all the functions to be under-taken on board during a representative voyage or operational period, including determination of the number of crew required to undertake the relevant tasks and duties under both peak and routine work load conditions;

.6 identify those functions that constitute a nor-mal operation and determine the numbers of crew required to undertake the concurrent tasks and duties safely;

.7 identify the skills and experience required to perform those functions;

.8 establish working arrangements to ensure that the master and crew are capable of undertaking concurrent and continuing operations at the appropriate level(s) of responsibility, as speci-fied, with respect to their skills and training; and

.9 ensure that the working arrangements allow for sufficient rest periods to avoid fatigue.

26.2.3 Establishing Safe Manning Requirements

Specific factors to be taken into account in determining the safe manning level may include —

.1 frequency of port calls, length and nature of the voyage;

.2 operating area(s), waters and type of operations in which the vessel is involved and any special requirements of the operation;

.3 number, size (kw) and type of main propulsion units and auxiliaries;

.4 size, type of vessel, equipment and layout;

.5 construction and technical equipment of vessel;

.6 method of maintenance;

.7 how the proposed complement will deal with various emergency situations that may arise;

.8 navigational duties and responsibilities as required by STCW 95 including the following —

.1 to plan and conduct safe navigation;

.2 to maintain a safe navigational watch;

.3 to manoeuvre and handle the vessel in all conditions and during all operations;

.4 to safely moor and unmoor the vessel; and

.5 to maintain safety whilst in port.

.9 Vessel specific operations —

.1 the nature and duration of the operation(s) the vessel undertakes and local environmental conditions.

.10 Vessel operations and care for persons on-board, and maintaining life-saving, fire-fighting and other safety systems in operational condition —

.1 maintain the safety and security of all persons on board and keep life-saving, fire-fighting and other safety systems in operational condition, including the ability to muster and disembark passengers and non-essential personnel;

.2 operate and maintain watertight closing arrangements;

.3 perform operations necessary to protect the marine environment;

.4 provide medical care on board;

.5 undertake administrative tasks required for the safe operation of the vessel; and

.6 participation in mandatory safety drills and exercises.

.11 Marine engineering tasks and duties —

.1 operate and monitor the vessel's main propulsion and auxiliary machinery;

.2 maintain a safe engineering watch;

.3 manage and perform fuel and ballast operations; and

.4 maintain vessel's engine equipment, system and services.

.12 Electrical, electronic and control engineering duties —

.1 operate vessel's electrical and electronic equipment; and

.2 maintain vessel's electric and electronic systems.

.13 Radio communications —

.1 transmit and receive information using vessel communication equipment;

.2 maintain a safe radio watch;

.3 provide communications in emergencies.

.14 Maintenance and repair —

.1 carry out maintenance and repair work to the vessel and its machinery, equipment and systems, as appropriate to the method of maintenance and the repair system used.

.15 Fulfil obligations and requirements of the IMO ISPS Code as applicable.

26.2.4 Guidance on Appropriate Manning Levels

In determining what constitutes a minimum safe manning level, useful guidance may also be obtained by use of risk and hazard management tools such as formal safety assessment. The minimum safe manning levels should be those required for all reasonably foreseeable circumstances and working conditions to permit the safe operation of the vessel under normal operational conditions.

The tables in sections 26.2.8 and 26.2.9 provide guidance on the numbers of certificated deck and engineer officers, and ratings that may be considered appropriate to different sizes of vessels and tonnages.

26.2.5 Safe Manning Document

SOLAS requires that vessels over 500 GT, excluding pleasure yachts not engaged in trade, carry a Safe Manning Document. Owners and operators of vessels below 500 GT or those above 500 GT solely engaged for pleasure may also choose to hold a Safe Manning

Document in accordance with the tables at sections 26.2.8 and 26.2.9. This will allow the owner to consider a 'range and risk' approach when determining manning levels.

26.2.6 Application for a Safe Manning Document

Any application for a Safe Manning Document should be made by the owner, or a person authorised to act on their behalf, to The Bahamas Maritime Authority using Form BMA YR 106 and include a clear and concise explanation of how —

.1 the proposed manning level has been determined;

.2 it takes account of the guidance; and

.3 it takes account of the hours of work provisions.

A proposal should only be approved and Safe Manning Document issued provided the manning level fully satisfies the above principles, recom-mendations and guidelines.

When the manning level has been agreed a Safe Manning Document should be issued for that vessel in a format which complies with the requirements of SOLAS, as amended. The original should be retained on board and be available for inspection by an authorised person, whenever required.

In the event of any change in equipment, construction or use of the vessel, which may affect the safe manning level, the owner or operator should make an application for the issue of a new Safe Manning Document.

A Safe Manning Document of a vessel may be withdrawn if an owner or operator fails to submit a new proposal where a vessel changes trading area(s), construction, machinery or equipment, or operation and/or method of maintenance have changed, or a vessel persistently fails to comply with the hours of rest requirements.

26.2.7 Indicative Manning Levels

The owner/operators or managing agent of all seagoing yachts of more than 24 metres Load Line Length must ensure that personnel required for the safe operation of the vessel have recent and relevant

experience of the type and size of vessel, and the type of operation in which it is engaged.

This section includes indicative manning levels for vessels of 24 metres or more in load line length. The owner/operatorrs of vessels below 500 GT or those above 500 GT solely engaged for pleasure may find it advantageous to hold a Safe Manning Document.

In addition to the tables specific submissions may be considered from owners and operators of vessels, including those less than 500 GT, seeking a varied safe manning document based on a range and risk approach to safe manning with the flexibility to reduce the manning level taking into account, for example a limiting operating area(s) or parameters, and levels of automation.

26.2.8 MANNING SCALE FOR MOTOR YACHTS 24m OR MORE IN LENGTH AND UNDER 3000 GT

For details of certificates accepted by The Bahamas Maritime Authority (see The Bahamas National Annex).

Miles from a Safehaven	**Personnel**	**Vessel Type**		
		>24m <200 GT	**200-500 GT**	**500-3000 GT**
Up to 60	Master	1	1	1
	Chief Officer	1	1	1
	OOW(Navigation)	-	-	-
	Chief Engineer	1	1	1
	Second Engineer	-	-	-
	Assistant Engineer	-	1	1
	Yacht Rating	1	2	2
Up to 150	Master	1	1	1
	Chief Officer	1	1	1
	OOW(Navigation)	-	-	-
	Chief Engineer	1	1	1
	Second Engineer	-	-	1
	Assistant Engineer	-	1	-
	Yacht Rating	1	2	2
Unlimited	Master	1	1	1
	Chief Officer	1	1	1
	OOW (Navigation)	-	1	1
	Chief Engineer	1	1	1
	Second Engineer	-	1	1
	Assistant Engineer	1	-	-
	Yacht Rating	2	2	2

26.2.9 MANNING SCALE FOR SAILING YACHTS 24m OR MORE IN LENGTH AND UNDER 500GT

For details of certificates accepted by The Bahamas Maritime Authority (see The Bahamas National Annex)

Miles from a Safehaven	**PERSONNEL**	**Vessel Type**		
		>24M <200 GT	**200-500 GT**	**500-3000 GT**
Up to 60	Master	1	1	1
	Chief Officer	1	1	1
	OOW (Navigation)	-	-	-
	Chief Engineer	1	1	1
	Second Engineer	-	-	-
	Assistant Engineer	-	1	1
	Yacht Rating	2	2	3
Up to 150	Master	1	1	1
	Chief Officer	1	1	1
	OOW (Navigation)	-	-	-
	Chief Engineer	1	1	1
	Second Engineer	-	-	1
	Assistant Engineer	-	1	-
	Yacht Rating	2	2	3
Unlimited	Master	1	1	1
	Chief Officer	1	1	1
	OOW (Navigation)	-	1	1
	Chief Engineer	1	1	1
	Second Engineer	-	-	1
	Assistant Engineer	1	1	-
	Yacht Rating	2	2	3

26.2.10 Dual Certification

Where appropriate dual deck and engineer roles may be considered provided that the officer is suitably qualified in both disciplines and that the person holding the dual role is a person other than the master.

In considering whether a dual role position is appropriate regard should be had to the overall safe manning level of the vessel. In such cases additional rating(s) may require to be carried.

26.2.11 Sailing Vessels

Depending on the type of rig and level of automation additional personnel may be required to operate the rig of a sailing vessel.

27 PASSENGERS

No vessel to which the Code applies should carry more than 12 passengers on a voyage or excursion. The following meanings apply —

"Passenger" has the meaning assigned to it under section 2;

"a *person employed or engaged in any capacity on board the vessel on the business of the vessel"* may reasonably include —

.1 *bona-fide* members of the crew over the minimum school leaving age (about 16 years) who are properly employed on the operation of the vessel;

.2 person(s) employed either by the owner or the charterer in connection with business interests and providing a service available to all passengers; and

.3 person(s) employed either by the owner or the charterer in relation to social activities on board and providing a service available to all passengers.

With reference to .2 and .3 above, such persons should be included in the crew list required for the vessel, should have received on board familiarisation training as required by STCW, and should not be assigned duties on the muster list.

SECTION 28 SURVEY, CERTIFICATION, INSPECTION AND MAINTENANCE

OBJECTIVES	
28.1	**Certification required by each vessel.**
28.2	**Survey and certification required at delivery, including any necessary Exemptions.**
28.3	**Survey and certification required to maintain the validity of the certificates.**
28.4 & 28.5	**Delegation issues and the roles of the Recognised Organisations.**
28.6	**Casualty Investigation.**

28.1 General

28.1.1 All Yachts covered by this Code are required to be surveyed and certificated in accordance with the Convention and Code references in the following table, which is also available in Annex 4 to the Code:

28.1.2

Certification	Subject & Convention	Limits	Detail & Remarks
International Tonnage Certificate	Tonnage ITC 69	24 metres and over	Only issued at the time of building or after a conversion where the tonnage is altered
International Load Line Certificate	Load Line ILLC 1966	24 metres and over	Intact Stability & Subdivision Standard; # - Using equivalent standards of the Code
Safety Construction Certificate	Construction SOLAS 74 Ch II-1	500 GT and over	Construction
	Fire Protection SOLAS 74 Ch II-1	500 GT and over	Structural Fire Protection & Means of Escape # - Using equivalent standards of the Code
Safety Equipment Certificate	Fire Appliances SOLAS 74 Ch II-2	500 GT and over	Fire Appliances
	Life Saving Appliances SOLAS 74 Ch III	500 GT and over	Life - Saving Appliances
	Navigation Equipment SOLAS 74 Ch V	500 GT and over	Navigation lights, sounds, signals etc.
Safety Radio Certificate	Radio SOLAS 74 Ch IV	300 GT and over	Including LRIT Conformance Test Report if such Equipment is fitted. See section 16.3
International Oil Pollution Prevention Certificate	Pollution MARPOL Annex I	400 GT and over	Pollution prevention equipment
International Safety Management Certificate	International Safety Management Code SOLAS Ch XI-1 & ISM Code	500 GT and over	Safety Management System
International	International Ship and	500 GT	Security System

Ship Security Certificate	Port Facility Security Code SOLAS CH XI-2 & ISPS Code	and over	
Certificate of Compliance	Various	24 metres and over	Covers aspects surveyed under the code for which other certificates are not required.
Safe Manning Document	Manning SOLAS V/14 & STCW & BYC	500 GT and over	

28.1.2 Statutory work may be undertaken by surveyors of The Bahamas Maritime Authority or by exclusive surveyors of a Recognised Organisation (see Annex 5, The Bahamas National Annex and BMA Bulletin No 3) and, for Safety Radio Surveys, an appropriate Certifying Authority in relation to radio installations. (See Annex 5, The Bahamas National Annex for delegations.)

28.1.3 A yacht to which the International Conventions apply must be surveyed and, upon the necessary standards being met, Convention certificates will be issued. The full term certificates will have a normal validity of five years requiring periodic surveys to maintain that validity as detailed in section 28.3.

28.1.4 All requests for survey and certification must be made to The Bahamas Maritime Authority or the appropriate Recognised Organisation in accordance with the procedures detailed in BMA Bulletin No 102, as amended.

28.2 Initial Survey (including new-building commercial vessels)

28.2.1 Yachts are required to be issued with the following certificates, as appropriate, at or before delivery from building —

.1 International Tonnage Certificate (all vessels)

.2 International Load Line Certificate (all vessels)

.3 Cargo Ship Safety Construction Certificate (vessels of 500 GT and over)

.4 Cargo Ship Safety Equipment (vessels of 500 GT and over)

.5 Cargo Ship Safety Radio Certificate (vessels of 300 GT and over)

.6 International Oil Pollution Prevention Certificate (vessels of 400 GT and over)

.7 International Safety Management (ISM) (vessels of 500 GT and over) (refer to section 30.1)

.8 International Ship Security Certificate (ISPS) (vessels of 500 GT and over) (refer to section 31)

.9 BYC Certificate of Compliance (all yachts) - this certificate is to cover all aspects of the Code for which a separate certificate is not required

.10 Safe Manning Document (vessels of 500 GT and over).

28.2.2 Exemption from certain safety regulations

If an owner or managing agent seeks any permanent exemption from the application of specific regulations or requirements, formal application must be made to the body that is responsible for issuing the appropriate certificate: either the Recognised Organisation or The Bahamas Maritime Authority as detailed in the deleation of survey responsibilities, demonstrating an equivalent level of safety. The Recognised Organisation or The Bahamas Maritime Authority will review the application, in accordance with The Bahamas Maritime Authority processes detailed in The Bahamas Maritime Authority Bulletin No. 8 in consideration of issuing an exemption.

28.3 Periodical Surveys

28.3.1 International Load Line Certificates (ILLC),

Cargo Ship Safety Construction Certificates (SAFCON)

Cargo Ship Safety Equipment (SEC)

International Oil Pollution Prevention Certificate (IOPPC)

Safety Radio Certificates (SRC)

BYC Certificates of Compliance (BYC Cert)

The above certificates will each be valid for a maximum period of 5 years and should be subject to an Annual Survey within three months of the Anniversary Date of each certificate.

.1 Each survey for the ILLC, SAFCON, SEC and IOPPC should be carried out to the satisfaction of The Bahamas Maritime Authority or the Recognised Organisation under the arrangement and guidance of The Bahamas Maritime Authority.

.2 Each survey for the SRC should be carried out to the satisfaction of The Bahamas Maritime Authority or the Recognised Organisation under the arrangement and guidance of The Bahamas Maritime Authority. The SRC will be issued on behalf of The Commonwealth of The Bahamas. In order to satisfy this survey it should be noted that a valid Ship Radio Licence must also be on board. This is referred to in Annex 5, The Bahamas National Annex of this Code.

.3 Each survey for the BYC Certificate of Compliance should be carried out to the satisfaction of The Bahamas Maritime Authority or the Recognised Organisation under the arrangement and guidance of The Bahamas Maritime Authority.

All the above are subject to the delegations specified in Annex 5, The Bahamas National Annex of this Code.

28.3.2 International Safety Management Certificate (ISM SMC) International Ship Security Certificate (ISSC)

The above certificates will each be valid for a maximum period of 5 years and should be subject to an Intermediate Audit in accordance with the provisions of the ISM and ISPS Codes. Each such audit should be carried out to the satisfaction of The Bahamas Maritime Authority or the Recognised Organisation, as appropriate, subject to the delegations specified in Annex 5, The Bahamas National Annex of this Code.

28.3.3 Mandatory attendance by a Bahamas Appointed Yacht Surveyor

At least once during the five year period of the BYC Certificate of Compliance, a Bahamas Maritime Authority surveyor, who is not appointed through the Recognised Organisation, will attend the yacht to undertake one of the above Initial, Periodical or Renewal surveys or audits as part of the above process and to conduct a general inspection to ensure that standards are being met.

28.3.4 Extensions to certificates

An application for an extension to any of the above certificates should be made to The Bahamas Maritime Authority or the Recognised Organisation (in accordance with the provisions of BMA Bulletin No. 8) but will only be agreed in cases when it appears proper and reasonable to do so.

In the event that any requirement of a certificate cannot be met due to exceptional circumstances the Master, Owner, Manager or Owner's Agent should immediately report this to The Bahamas Maritime Authority or the Recognised Organisation (in accordance with the provisions of BMA Bulletin No. 8.).

28.4 Use of a Recognised Organisation

Each approved Recognised Organisation is aware of the extent to which responsibility has been delegated to issue Statutory Certificates. International Conventions give specific discretion to The Bahamas Maritime Authority to either make exemptions or accept equivalent equipment or arrangements. The formal agreement between The Bahamas Maritime Authority and each Recognised Organisation governs the relationship between those two parties.

28.5 Use of a Recognised Organisation Surveyor to act on the behalf of The Bahamas Maritime Authority

An exclusive surveyor from a Recognised Organisation, proposed by them, may be appointed to act on behalf of The Bahamas Maritime Authority in cases when it is impracticable for a surveyor of The Bahamas Maritime Authority to make the necessary attendance for the survey.

When a Recognised Organisation surveyor is so appointed, actions taken will be under direct instruction of The Bahamas Maritime Authority. The Bahamas Maritime Authority will provide the appointed surveyor with detailed guidance on the scope of survey and report required.

28.6 Accident Investigations

The Bahamas Maritime Authority is obliged to investigate accidents or incidents in which a vessel, including any yacht, registered in The Bahamas is involved, in accordance with the requirements of International Conventions. Apart from this legal requirement, The Bahamas Maritime Authority investigates such occurrences to demonstrate the effective control and importance they attach to safety at sea.

It is an offence for the vessel's master, skipper or owner not to inform the appropriate authority of a reportable accident shortly after it occurs and to provide details so that an assessment of its seriousness can be quickly made. The Bahamas Maritime Authority will appoint a suitable Surveyor or Inspector whenever an investigation is required. The Bahamas Maritime Authority will then receive the Surveyor's or

the Inspector's report and will deal with the follow up action.

All serious casualties in accordance with the International Maritime Organisation's (IMO) definition will be reported to IMO by The Bahamas Maritime Authority.

29 CREW AGREEMENTS

29.1 Crew Agreements should be available on board as required by The Bahamas Maritime Authority.

30 SAFETY MANAGEMENT

30.1 All vessels of 500 GT and over, and associated managers, are required to comply with the International Management Code for the Safe Operation of Ships and for Pollution Prevention, otherwise referred to as the IMO International Safety Management (ISM) Code.

30.2 All vessels less than 500 GT should employ a safety management system as described in Annex 2.

31 INTERNATIONAL SHIP AND PORT FACILITY SECURITY CODE

All vessels of 500 GT and over are required to comply with the IMO International Ship and Port Facility Security Code.

ANNEX 1 THIS PAGE WAS INTENTIONALLY LEFT BLANK

ANNEX 2 SAFETY MANAGEMENT SYSTEM FOR VESSELS LESS THAN 500GT

INTRODUCTION

1. The purpose of this Annex is to provide guidance on how to develop and implement an effective safety management system for vessel less than 500 GT, where full certification to the International Safety Management Code is not a requirement.

GENERAL

2. Each operator should create a safe working environment, which should include the following:

A health and safety protection policy

2.1 This must address the issues of health, safety and the environment as they affect the company and its staff, both ashore and afloat. Such a policy might read along the following lines —

> *"The policy of (name of Company/Owner) is to conduct its activities taking full account of the health and safety of its employees and of all persons using or connected with the Company/ Owner. In implementing this policy, (name of Company/Owner) will ensure that the [vessel] is, at all times, properly maintained and operated by qualified personnel in full compliance with relevant legislation. In particular the [Company/ Owner] will carry out an assessment of the risks to the health and safety of workers and others affected by [the undertaking], and will take the necessary measures to minimise the risks identified."*

2.2 The owner/operator is recommended to develop and implement an oil management plan to the same standard as the garbage management plan and to integrate it with the Health and Safety Protection Policy. This is not required for vessels over 400 GT, for which an IOPP certificate is required.

Procedures to ensure safe operation of vessels in compliance with the regulations and rules

2.3 The regulations and rules, not addressed by this Code of Practice, which apply to all vessels include but are not limited to —

- International Regulations for Preventing Collisions at Sea;
- Local Navigation Rules;
- National health and safety regulations;
- The Code of Safe Working Practices for Merchant Seamen;
- All relevant national shipping or guidance notices.

2.3.1 The company should draw up simple procedures to ensure that safe working practices are carried out in the operation of the vessel. These may be in the form of checklists which can be followed by all personnel.

2.3.2 For some vessels, it might be appropriate to have permanently exhibited checklists, e.g. in the wheel-house for navigational items. Alternatively, in a smaller vessel, the record could take any suitable form such as a diary as distinct from a specially printed logbook. Whatever form the record takes, such entries should be accepted as evidence of compliance with the **ONBOARD PROCEDURES** requirements.

Lines of communication between personnel, ashore and afloat

2.4 Responsibility and authority of each employee should be clear. This may be best illustrated in a simple diagram, showing who reports to whom.

Procedures for reporting accidents

2.5 The requirement for reporting accidents should be well understood by all personnel and in so doing improve the safety culture practiced on board.

Procedures for responding to emergency situations

2.6 There should be clearly stated procedures for re-sponding to emergency situations. These emergencies may include but not be limited to —

- fire
- collision

- grounding
- violent act
- main propulsion or steering failure
- man overboard

2.6.1 Checklists may be useful in this regard.

HEALTH AND SAFETY PROTECTION POLICY

3. One or more competent persons should be delegated to take responsibility for health and safety, and that person/persons should be clearly identified. It is the responsibility of the owner/operator to ensure that the policy is complied with, and that the responsibilities are understood.

4. The company/owner should develop a policy on prevention of alcohol and drug abuse.

5. All personnel both ashore and afloat have a duty to take care of themselves and other persons who may be affected by their acts or omissions.

6. It is essential that, in the event of an emergency, there is the ability to communicate with the emergency services via a shore base. The shore base may be the company office ashore, the local Coastguard, Police or Fire Station, or another office as may be agreed between the vessel and the shore base.

RESPONSIBILITIES

7. The Master must have authority at all times, to make decisions with regard to the safety of the vessel and the persons on board. To ensure that there is no ambiguity regarding the authority of the Master, there should be a simple written statement to this effect.

PERSONNEL AND TRAINING

8. All personnel should receive training appropriate to the tasks they undertake. It is the responsibility of the company/owner to ensure that this training is given, and that the personnel have an understanding of the relevant regulations and rules.

9. As a minimum, this means —

- for the Master, the relevant qualifications;

- for the crew, relevant qualifications and any additional training appropriate to their designated duties.

10. Prior to the first occasion of working on the vessel, each employee must receive appropriate familiarisation training and proper instruction in onboard procedures. This could include but is not limited to —
    - mooring and unmooring;
    - launching and recovery of survival craft;
    - evacuation from all areas of the vessel;
    - donning of lifejackets; and
    - use and handling of fire-fighting equipment.

ONBOARD PROCEDURES

11. Simple procedures should be developed for the operation of the vessel. These should include, but not be limited to —
    - testing of equipment, including steering gear, prior to commencing a passage;
    - navigation and handling of the vessel;
    - maintenance routines;
    - bunkering operations;
    - watertight/weathertight integrity;
    - stability of the vessel; and
    - conduct of passengers and crew while on board.

PREPARATION FOR EMERGENCIES

12. The potential emergencies likely to be encountered by the vessel should be considered. Exercises should then be carried out in the handling of these emergencies and evacuation from the vessel.

13. Where possible, all personnel should be involved in these exercises, both ashore and afloat.

14. The roles and responsibilities of all personnel in an emergency situation should be defined.

15. The exercises should be recorded. The names of those who participated should also be recorded.

REPORTING OF ACCIDENTS

16. Vessels operating under this Code are required to report any accidents to The Bahamas Maritime Authority and the company must therefore have a

procedure in place. Additionally, all accidents and near accidents should be recorded and reported to the owner/operator, who should implement corrective action, with the aim of improving safety.

MAINTENANCE OF THE VESSEL AND EQUIPMENT

17. Maintenance of the vessel and equipment is an essential ingredient of safety management. The equipment should be checked and tested daily when in use, in addition to the tests referred to in the **ONBOARD PROCEDURES** section of the Code.

18. There should be procedures for a more detailed inspection and maintenance programme of the vessel and equipment.

19. The frequency of the inspections should be determined by the owner/operator, but every event should be recorded.

20. A checklist could be employed as an aide memoir for the inspection of equipment.

REVIEW

21. Every company/owner should undertake a review of the safety management system of all vessels at least once in every three years.

ANNEX 3 OPEN FLAME GAS INSTALLATIONS

1 General Information

1.1 Possible dangers arising from the use of liquid petroleum gas (LPG) open flame appliances in the marine environment include fire, explosion and asphyxiation, due to leakage of gas from the installation.

1.2 Consequently, the siting of gas-consuming appliances and storage containers and the provision of adequate ventilation to spaces containing them, is most important.

1.3 It is dangerous to sleep in spaces where gas-consuming open-flame appliances are left burning, because of the risk of carbon monoxide poisoning.

1.4 LPG is heavier than air and if released, may travel some distance whilst seeking the lowest part of a space. Therefore, it is possible for gas to accumulate in relatively inaccessible areas, such as bilges, and diffuse to form an explosive mixture with air, as in the case of petrol vapour.

1.5 A frequent cause of accidents involving LPG installations is the use of unsuitable fittings and improvised "temporary" repairs.

2 Stowage of Gas Containers

2.1 LPG cylinders, regulators and safety devices should be stowed on the open deck (where leakage will not accumulate) or in a compartment that is vapour-tight to the vessels interior, and fitted with a vent and drain, so that any gas which may leak can disperse overboard.

2.2 The vent and drain should not be less 19 mm in diameter, run to the outside of the craft and terminate 75 mm or more above the "at rest" waterline. Generally, the drain and locker ventilation should be 500 mm or more from any opening to the interior.

2.3 The cylinders and associated fittings should be positively secured against movement and protected from damage in any foreseeable event.

2.4 Any electrical equipment located in cylinder lockers should be certified safe for use in the potential explosive atmosphere.

3 Cylinders and Attachments

3.1 Each system shall be fitted with a readily accessible, manually operated isolating valve in the supply pressure part of the system.

3.2 In multiple container installations non-return valve should be placed in the supply line near to the stop valve on each container. If a change-over device is used (automatic or manual), it should be provided with non-return valves to isolate any depleted container.

3.3 Where more than one container can supply a system, the system should not be used with a container removed unless the unattached pipe is fitted with a suitable gas tight plug arrangement.

3.4 Containers not in use or not being fitted into an installation should have the protecting cap in place over the container valve.

4 Fittings and Pipework

4.1 For rigid pipework systems solid drawn copper alloy or stainless steel tube. Steel tubing or aluminium or any materials having a low melting point should not be used.

4.2 Connection between rigid pipe sections should be made with hard solder (minimum melting point 450°C) appropriate compression or screwed fittings are recommended for general use for pipework in LPG installations.

4.3 Lengths of flexible piping (if required for flexible connections) should conform to an appropriate standard, be kept as short as possible, and be protected from inadvertent damage. Such hose should be installed in such a manner as to give access for inspection along its length.

Proposals for a more extensive use of flexible piping (which conforms to an internationally recognised standard for its application) should be submitted to The Bahamas Maritime Authority for approval on an individual basis.

5 Appliances

5.1 All appliances should be well secured to avoid movement.

5.2 All unattended appliances should be of the room sealed type, i.e. where the gas flames are isolated in a totally enclosed shield where the air supply and combustion gas outlets are piped to open air.

5.3 All gas burners and pilot flames should be fitted with a flame supervision device which will shut off the gas supply to the burner or pilot flame in the event of flame failure.

5.4 Flue-less heaters should be selected only if fitted with atmosphere-sensitive cut-off devices to shut off the gas supply at a carbon dioxide concentration of not more than 1.5% by

volume.

5.5 Heaters of a catalytic type should not be used.

6 Ventilation

6.1 The ventilation of requirements of a space containing a LPG appliance should be assessed against an appropriate standard and should take into account gas burning equipment and persons occupying that space.

6.2 Where ventilators required for the LPG appliances in intermittent use can be closed, there should be appropriate signs at the appliance warning of the need to have those ventilators open before the appliance is used.

7 Gas Detection

7.1 Suitable means for detecting the leakage of gas should be provided in any compartment containing a gas-consuming appliance, or in any adjoining space of a compartment into which the gas (more dense than air) may seep.

7.2 Gas detectors heads should be securely fixed in the lower part of the compartment in the vicinity of the gas-consuming appliance and in other space(s) into which gas may seep. In areas where the detector head is susceptible to damage in the lowest part of the compartment (e.g. engine space bilge) the detector head should at least be fitted below the lowest point of ignition.

7.3 Any gas detector should preferably, be of a type which will be activated promptly and automatically by the presence of a gas concentration in air of not greater than 0.5% (representing approximately 25% of the lower explosive limit). The detection system should incorporate a visible alarm and an audible which can be heard in the space concerned and the control position with the vessel in operation.

7.4 Where electrical detection equipment is fitted, it should be certified as being flame-proof or intrinsically safe for the gas being used.

7.5 In all cases, the arrangements should be such that the detection system can be tested frequently whilst the vessel is in service, which should include a test of the detector head operation as well as the alarm circuit, in accordance with the manufacturers' instructions.

7.6 All detection equipment should be maintained in accordance with the manufacturer's requirements.

8 Emergency Action

8.1 A suitable notice, detailing the action to be taken when an alarm is given by the gas detection system, should be displayed prominently in the vessel.

8.2 The information given should include the following:

.1 The need to be ever alert for gas leakage; and

.2 When leakage is detected or suspected, all gas-consuming appliances should be shut off at the main supply from the container(s) and NO SMOKING should be permitted until it is safe to do so.

.3 **NAKED LIGHTS SHOULD NEVER BE USED AS A MEANS OF LOCATING GAS LEAKS.**

ANNEX 4 LIST OF CERTIFICATES TO BE ISSUED

Certification	Subject & Convention	Limits	Detail & Remarks
International Tonnage Certificate	Tonnage ITC 69	24 metres and over	Only issued at the time of building or after a conversion where the tonnage is altered
International Load Line Certificate	Load Line ILLC 1966	24 metres and over	Intact Stability & Subdivision Standard; # - Using equivalent standards of the Code
Safety Construction Certificate	Construction SOLAS 74 Ch II-1	500 GT and over	Construction
	Fire Protection SOLAS 74 Ch II-1	500 GT and over	Structural Fire Protection & Means of Escape # - Using equivalent standards of the Code
Safety Equipment Certificate	Fire Appliances SOLAS 74 Ch II-2	500 GT and over	Fire Appliances
	Life Saving Appliances SOLAS 74 Ch III	500 GT and over	Life - Saving Appliances
	Navigation Equipment SOLAS 74 Ch V	500 GT and over	Navigation lights, sounds, signals etc.
Safety Radio Certificate	Radio SOLAS 74 Ch IV	300 GT and over	Including LRIT Conformance Test Report if such Equipment is fitted. See section 16.3
International Oil Pollution Prevention Certificate	Pollution MARPOL Annex 1	400 GT and over	Pollution prevention equipment
International Safety Management Certificate	International Safety Management Code SOLAS Ch XI-1 & ISM Code	500 GT and over	Safety Management System
International Ship Security Certificate	International Ship and Port Facility Security Code SOLAS CH XI-2 & ISPS Code	500 GT and over	Security System
Certificate of Compliance	Various	24 metres and over	Covers aspects surveyed under the code for which other certificates are not required.

Safe Manning Document	Manning SOLAS V/14 & STCW & BYC	500 GT and over	

NOTE: THE BAHAMAS MARITIME AUTHORITY RETAINS THE RIGHT TO SURVEY AND ISSUE CERTIFICATES FOR ALL OF THE ABOVE ITEMS.

ANNEX 5 BAHAMAS NATIONAL ANNEX

This Annex contains requirements and supplementary notes specific to Bahamian vessels.

1 Contact Details

The principal contact details for The Bahamas Maritime Authority are as detailed here. Further details are available from The Bahamas Maritime Authority web site.

For all Yachts and general Enquiries:	yachts@bahamasmaritime.com
For Casualty Enquiries:	casualty@bahamasmaritime.com
London Office	New York Office
120 Old Broad Street London EC2N 1AR United Kingdom	Bahamas House 231 East 46th Street New York New York 10017 United States of America
Tel. +44 20 7562 1300 Fax. +44 20 7614 0650 Email:	Tel. +1 212 829 0221 Fax+1 212 829 0356 Email:
reg@bahamasmaritime.com	newyork@bahamasmaritime.com
Nassau Office	Hong Kong Office
Manx Corporate Centre Third Floor East, West Bay Street PO Box N-4679 Tel. +1 242 356 5772 Fax. +1 242 356 5889 Email:	Room 2019-2020, 20th floor Hutchinson House, 10 Harcourt Road Hong Kong Tel, +1 242 356 5772 Fax. +1 242 356 5889 Email:
nassau@bahamasmaritime.com	hongkong@bahamasmaritime.com

The following London based departmental email addresses may also be used for general enquiries:

For Registration Enquiries:	reg@bahamasmaritime.com
For Technical Enquiries:	yachts@bahamasmaritime.com
For Seafarers and Manning Enquiries:	stcw@bahamasmaritime.com
For Financial Enquiries:	finance@bahamasmaritime.com

2 Definitions

"Aviation Inspection Body" means a body delegated the responsibility of inspecting helicopter landing areas by The Bahamas Maritime Authority. The verification process will include inspection, certification and, where necessary, the application of appropriate operational limitations. Such Bodies will be recognised as having the necessary competencies by a Bahamas Recognised Organisation or directly by The Bahamas Maritime Authority.

"To Sea" means beyond any smooth water or partially smooth water limits which may have been designated by The Bahamas Maritime Authority. In the event that no such areas have been designated, then it means that the vessel is considered to have proceeded to sea upon leaving the immediate confines of a designated harbour.

"Minimum Age of Trainees"

A trainee may only sail on a vessel in which it can reasonably be expected that he or she is physically and mentally capable of safely taking part in the operation of the vessel. There shall be specific documented provisions in place to cover the health, safety, and welfare of the trainees. Safety management tools, such as formal safety assessment (FSA) techniques may be useful when considering the acceptable age of a trainee for a specific vessel, voyage or operating area/condition. Due consideration must also be given to the profile and balance of the crew for each voyage taking into account the age and sex of the trainees. In any event a trainee shall not be less than 12 years of age and any person below this age must be considered as a passenger.

"Pleasure vessel" means:

(a) any vessel which at the time it is being used is —

(i) (aa) wholly owned by an individual or individuals, used only for the sport or pleasure of the owner or the immediate family or friends of the owner; or

(bb) in the case of a vessel owned by a body corporate, used only for sport or pleasure and on which the persons on board are employees or officers of the body corporate, or their immediate family or friends; and

(ii) on a voyage or excursion which is one for which the owner does not receive money for or in connection with operating the vessel or carrying any person, other than as a contribution to the direct expenses of the operation of the vessel incurred during the voyage or excursion; or

(b) any vessel wholly owned by or on behalf of a members' club formed for the purpose of sport or pleasure which, at the time it is being used, is used only for the sport or pleasure of members of that club or their immediate family, and for the use of which any charges levied are paid into club funds and applied for the general use of the club; and

(c) in the case of any vessel referred to in paragraphs (a) or (b) above, no other payments are made by or on behalf of users of the vessel, other than by the owner.

In this definition, "immediate family" of an individual means, in relation to that individual, the husband or wife, or a relative of that individual or that relative's husband or wife and "Relative" means brother, sister, ancestor or lineal descendant.

"Yacht": For the purposes of this Code, a yacht is taken to mean a vessel that does not carry cargo, does not carry fare-paying passengers on pre-defined routes or itineraries and is intended for sport or pleasure. A yacht is to be defined as being operated —

(i) commercially for hire, to carry onboard a charterer and their party; or

(ii) non-commercially as a "pleasure vessel" as defined above.

3 Application and Interpretation

3.1.1 Vessels coming under The Bahamian flag that are certificated to the requirements of United Kingdom Code of Practice for the Safety of Large Commercial Sailing and Motor Vessels ("LY2") published in 1997, may continue to operate under the same provisions applicable at the time of certification. Vessels undergoing refit or modification are encouraged to comply with the provisions of this revision as far as is reasonable and practicable.

The application of the 3000 GT limit is not applicable to vessels for which the building contract is signed, or survey has started, prior to 24th September 2004.

3.2.2 Exemptions

Vessels certificated and compliant with the BYC may operate as pleasure vessels upon application to, and approval by. The Bahamas Maritime Authority. In such circumstances The Bahamas Maritime Authority may waive certain regulations in this Code providing, at all times, the yacht carries sufficient life-saving appliances and a Safe Manning Document including vessels under 500 GT) being in force. Applications will be considered on a case by case or voyage by voyage basis.

4 Construction and Strength

4.1. Recognised Organisations

The following Classification Societies are The Bahamas Recognised Organisations authorised to carry out statutory certification services on behalf of The Bahamas Maritime Authority —

American Bureau of Shipping (ABS)
Bureau Veritas (BV)
China Classification Society (CCS)
Det Norske Veritas (DNV)
Germanischer Lloyd (GL)
Korean Register (KR)
Lloyd's Register (LR)
Nippon Kaiji Kyokai (NK)
Registro Italiano Navale (RINA)
Russian Maritime Register of Shipping (RS)

14 FIRE SAFETY

14.1.5.5 Caution must be exercised in the positioning of any electrical equipment or switch/contact gear in the vicinity of potential petroleum vapours. Guidance may be obtained from the International Electrotechnical Commission Standards public-cation IEC 60079-14.

22 Protection of Personnel

Reference should be made to the ILO publication "Accident Prevention on Board Ship at Sea and in Port - Code of Practice" or other equivalent national Codes of Safe Working Practices for Merchant Seamen.

23 Medical Stores

Medical stores requirements for the purposes of this Code are as prescribed in the International Medical Guide for Ships (IMGS). as amended, World Health Organization (WHO) and Guidance to the International Medical Guide for Ships (as amended). These are detailed in The Bahamas Maritime Authority Bulletin

No 131.

25 Clean Seas

The IMO MARPOL Convention Annexes relevant to the operation of Large Yachts are implemented by The Bahamas Merchant Shipping (Oil Pollution) Act No. 17 of 1976, as amended.

MARPOL Annex I: Oil Record Book

The Bahamas Maritime Authority has issued guidance on the information to be entered into the Oil Record Book (Part 1). (Refer to BMA Information Bulletin No.84).

MARPOL Annex IV: Prevention of Pollution by Sewage from Ships.

The Bahamas is not a signatory to Annex IV at this time. Therefore a Statement of Compliance may be issued *in lieu* of a Convention certificate upon satisfactory survey.

MARPOL Annex V: Prevention of Pollution by Garbage from Ships.

There are no survey or certification requirements for MARPOL Annex V. There are currently no special instructions.

MARPOL Annex VI: Prevention of Air Pollution from Ships

Recognised Organisations are authorized to conduct MARPOL Annex VI surveys on behalf of the Commonwealth of The Bahamas for the issue and maintenance of the International Air Pollution Prevention Certificate in accordance with MARPOL 73/78 Annex VI; and the Engine International Air Pollution Prevention Certificate in accordance with the NOx Technical Code.

(Refer to BMA Information Bulletin No.75).

Port Waste Reception Facilities

Port authorities should be advised of the waste discharge requirements of the vessel well in advance of arrival and the port's regulations observed.

26 Manning

STCW qualifications will be acceptable to The Bahamas Maritime Authority subject to the recognition process detailed in STCW 1/10.

Qualifications issued to officers based upon National standards will be recognised upon review and published in Bulletin No 132.

28 Survey, Certification, Inspection, and Maintenance

28.1.2 & 28.3.1 .1 The Safety Radio Certificate is a SOLAS IV Certificate issued under the authority of The Bahamas Maritime Authority. Recognised Organisations and The Bahamas Maritime Authority may use specialist Radio Surveyors to survey the SRC.

.2 Yachts must also hold on board a valid "Cargo Ship Radio Licence." That will be issued by The Bahamas Maritime Authority on behalf of The Utilities Regulation and Competition Authority (URCA) of The Bahamas who are the appropriate Licensing Authority for radio installations in The Bahamas and on board Bahamian vessels.

28.7 Accident Investigation Reporting Regulations

It is a requirement of The Bahamas Merchant Shipping Act 1976 section 240A having regard for SOLAS Chapter I, Regulation 21 and IMO A.849(20); that if a Bahamian registered vessel is involved in an accident involving serious injury; loss of life; or damage to the ship, property or the environment the owner or manager must report the accident to The Bahamas Maritime Authority. Guidance is available in Information Bulletin No. 04 "Accident Reporting".

29.1 Crew Agreements should be as detailed in The Merchant Shipping Act.

Certification	Subject & Convention	Limits	Detail & Remarks	Bahamas Regulation	Delegation
International Tonnage Certificate	Tonnage ITC 69	24 metres & over		Merchant Shipping Act, section 63	Recognised Organisation
International Load Line Certificate	Load Line ILLC 66 General		Intact Stability & Subdivision Standard - Using equivalent standards of the Code	Merchant Shipping Act, section 192	Assigning Authorities (Recognised Organisation)
	Inclining Test, Stability	24 metres & over	LL that applies to yachts which are not subject to SOLAS		Assigning Authorities (Recognised Organisation)
International Safety Construction Certificate	Construction SOLAS 74	500 GT & over	Construction	Merchant Shipping Act, section 185	Certifying Authorities (Recognised Organisation)
	Fire Protection SOLAS 74	500 GT & over	Structural Fire Protection & Means of Escape - Using the equivalent standards of the Code		Certifying Authorities (BMA or Recognised Organisation)
International Safety Equipment Certificate	Fire Appliances SOLAS 74	500 GT & over	Fire Appliances	Merchant Shipping Act, section 185	Certifying Authorities (BMA or Recognised Organisation)
	Life Saving Appliances SOLAS 74	500 GT & over	Life Saving Appliances		Certifying Authorities (BMA or Recognised Organisation)
	Navigation Equipment SOLAS 74 & COLREGS	500 GT & over	Navigation lights, sounds, signals etc.		Certifying Authorities (BMA or Recognised Organisation)

Table 1 - List of Certificates to be issued to Bahamian Yachts, applicable Regulations and extent of Delegation, page 1

Certification	Subject & Convention	Limits	Detail & Remarks	Bahamas Regulation	Delegation
International Safety Radio Certificate	Radio SOLAS 74	300 GT & over		Merchant Shipping Act, section 185	Delegated by Certifying Authorities (BMA or Recognised Organisation)
Safe Manning Document	Manning SOLAS 74	500 GT & over			BMA
International Oil Pollution Prevention Certificate Pollution	Oil Pollution Annex I MARPOL	400 GT & over	Pollution prevention equipment	Merchant Shipping (Oil Pollution) Act	Certifying Authorities (BMA or Recognised Organisation)
	Pollution by Packaged Harmful Substances: Annex III MARPOL			Merchant Shipping (Oil Pollution) Act, section 4	Certifying Authorities (BMA or Recognised Organisation)
	Pollution by Garbage Annex V MARPOL		Procedures to be followed		No survey or Certification requirements
	Air Pollution Annex VI MARPOL	Engines over 130 kW			
International Safety Management Certificate	International Safety Management Code & SOLAS 74	500 GT & over			Certifying Authorities (BMA or Recognised Organisation)
International Ship Security Certificate	International Ship and Port Facility Security Code & SOLAS 74	500 GT & over			Certifying Authorities (BMA or Recognised Organisation)
Certificate of Compliance	Various	24 metres & over	Covers aspects surveyed under the code for which other	NOT YET PROVIDED FOR	Certifying Authorities (BMA or Recognised Organisation)

Table 1 - List of Certificates to be issued to Bahamian Yachts, applicable Regulations and extent of Delegation, page 2

ANNEX 6 TECHNICAL STANDARD FOR HELICOPTER LANDING AREAS

Annex 6: Section 1 - Introduction

1.0 **General**

1.1 This Annex is based upon the Annex 6 to LY2. Other standards within the scope of the International Civil Aviation Organisation (ICAO) International Conventions, Protocols and Annexes to the Convention on International Civil Aviation may be considered for acceptability.

2.0 **Applicability**

2.1 This Annex is written so that it outlines the minimum standards for helicopter landing areas, and associated facilities, on board vessels within the scope of this Code where helicopter operations to / from the vessel are required.

2.2 This Annex does not address helicopter flight operations in any detail. It is intended as a technical standard for the landing area and associated on-board helicopter facilities. The helicopter pilot / operator is responsible for ensuring that the requirements of the Administration with which the helicopter is registered and the requirements of the Administration responsible for the airspace in which the helicopter is operating are complied with in full. The Aviation Inspection Body may provide further guidance.

2.3 Enquiries regarding operational (flight) limitations based on non-compliances of the landing area should be directed to the Aviation Inspection Body (see Annex 5, The Bahamas National Annex).

Annex 6: Section 2 - General Considerations

1.0 **General**

1.1 Requirements for helicopter landing areas on vessels results from the need to ensure that helicopters are afforded sufficient space to be able to operate safely at all times in the varying conditions experienced.

1.2 In order to ensure safe operation it is envisaged that limitations regarding the availability of the landing area will be applied by the Aviation Inspection Body on behalf of the Administration.

1.3 The helicopter's performance requirements and handling techniques are contained in, and governed by, the Rotorcraft Flight Manual and/or the operator's Operations Manual.

Annex 6: **Section 3 - Helicopter Landing Areas - Physical Characteristics**

1.0 **General**

1.1 This section outlines physical requirements for the characteristics of helicopter landing areas on large yachts. As part of the verification of landing area compliance, it should be stated for each helicopter landing area the maximum size of helicopter in terms of D-value and the maximum take-off weight of the heaviest helicopter in terms of 't' value for which each landing area is certificated with regard to size and strength. The following plans and particulars should be submitted to the Aviation Inspection Body, Certifying Authority and Administration (as appropriate) for approval —

.1 Hangar general arrangement (showing dimensions and structural considerations).

.2 Helicopter lift and movement arrangements (if appropriate).

.3 Structural fire protection.

.4 Fire detection and extinguishing arrangements.

1.2 The criteria which follow are based on helicopter size and weight. This data is summarised in Table 1 below. Where skid fitted helicopters are used routinely, landing nets are not recommended.

Table 1- D-Value and Helicopter Type Criteria (Not exhaustive)

Type	D value (m)	Perimeter D marking	Rotor diameter (m)	Max weight (kg)	't' value	Landing net size
Eurocopter EC120	11.52	12	10.00	1715	1.7	Not required
Bell 206 B3	11.96	12	10.16	1451/1519	1.5	Not required
Bell 206 L4	12.91	13	11.28	2018	2.0	Not required
Bell 407	12.61	13	10.66	2268	2.3	Not required
Eurocopter EC130	12.64	13	10.69	2400	2.4	Not required
Eurocopter AS350B3	12.94	13	10.69	2250	2.3	Not required
Eurocopter AS355	12.94	13	10.69	2600	2.6	Not required
Eurocopter EC 135	12.10	12	10.20	2720	2.7	Not required
Agusta A119	13.02	13	10.83	2720	2.7	Not required
Bell 427	13.00	13	11.28	2971	3.0	Not required
Eurocopter EC 145	13.03	13	11.00	3585	3.6	Not required
Agusta A109	13.04	13	11.00	2850	2.9	Small
Agusta Grand	12.96	13	10.83	3175	3.2	Small
Eurocopter AS365 N3	13.73	14	11.94	4300	4.3	Small
Eurocopter EC155 B1	14.30	14	12.60	4920	4.9	Medium
Bell 430	15.29	15	12.80	4218	4.2	Medium
Sikorsky S76	16.00	16	13.40	5318	5.3	Medium
Agusta Westland 139	16.66	17	13.80	6400	6.4	Medium
Bell 412	17.10	17	14.02	5398	5.4	Not required

2.0 Helicopter Landing Area Design Considerations - Environmental Effects

2.1 Introduction

2.1.1 The safety of helicopter flight operations can be seriously degraded by environmental effects that may be present around vessels. The term "environmental effects" describes the effects of the vessel, its systems, and forces in the surrounding environment, which result in a degraded local environment in which the helicopter is expected to operate. These environmental effects are typified by structure-induced turbulence, and turbulence / thermal effects caused by exhaust emissions. Controls in the form of landing area availability restrictions may be necessary and should be imposed via the Aviation Inspection Body. Such restrictions can be minimised by careful attention to the design and layout of the vessel topsides and, in particular, the location of the helicopter landing area.

2.2 Guidance for Landing Area Design Considerations

2.2.1 Standards for the design of landing areas should comply with International Standards approved by The Bahamas Maritime Authority. The following guidance is appropriate to that process and should be consulted by designers of helicopter landing areas at the earliest possible stage of the design process.

2.2.2 The objective is to help designers of helicopter landing areas to create topside designs and helicopter landing area locations that are safe and 'friendly' to helicopter operations by minimising exposure to environmental effects. It is hoped that, if used from the outset of the design process when facilities are first being laid out, this manual will prevent or minimise many helicopter landing area environmental problems at little or no extra cost to the design or construction of the vessel.

2.2.3 All new helicopter landing areas, or modifications to existing topside arrangements which could potentially have an effect on the environmental conditions due to turbulence around an existing helicopter landing area, or helicopter landing areas where operational experience has highlighted potential airflow problems should be subject to appropriate wind tunnel testing or Computational Fluid Dynamics (CFD) studies to establish the wind environ-

ment in which helicopters will be expected to operate. As a general rule the standard deviation of the vertical airflow velocity should be limited to 1.75 m/s. The helicopter pilot/operator and Aviation Inspection Body should be informed at the earliest opportunity of any wind conditions for which this criterion is not met in order to allow the appropriate platform availability restric-tions/limitations to be defined if necessary.

2.2.4 Designers of helicopter landing areas should commission a survey of ambient temperature rise based on a Gaussian dispersion model and supported by wind tunnel tests or CFD studies for new build helicopter landing areas, modifications to existing topside arrangements, or for helicopter landing areas where operational experience has highlighted potential thermal problems. When the results of such modelling and/or testing indicate that there may be a rise of air temperature of more than 2°C (averaged over a 3 second time interval), the helicopter pilot/operator and Aviation Inspection Body should be consulted at the earliest opportunity so that appropriate platform avail-ability restrictions/limitations may be applied if necessary.

3.0 **Size of Landing Area and Obstacle Protected Surfaces**

3.1 For any particular type of single main rotor helicopter, the helicopter landing area should be sufficiently large to contain a circle of diameter D equal to the largest dimension of the helicopter when the rotors are turning. This D circle should be totally unobstructed (see Table 1 for D values). Due to the actual shape of most helicopter landing areas the D circle will be 'imaginary' but the helicopter landing area shape should be capable of accommodating such a circle within its physical boundaries. For landing areas of less than 1D width this will not be the case. See D-Circle Definition.

3.1.1 When helicopter landing areas are provided in the bow or stem of a vessel or are purpose-built above the ships structure, they shall be regarded as purpose-built shipboard heliports. For purpose-built shipboard heliports provided in the bow or stern of a vessel, the landing area shall be either:

3.1.1.1 In accordance with 3.1 above, or,

3.1.1.2 For operations with limited touchdown directions, contain an area within which can be accomodated two

opposing arcs of a circle with a diameter of not less than 1D in the helicopter's longitudinal direction. The minimum width of the landing area shall be not less than 0.83D. In such arrangements of landing areas, the vessel will need to be maneuvered to ensure that the relative wind is appropriate to the direction of the helicopter touchdown heading. The touchdown heading of the helicopter is limited to the angular distance subtended by the 1D arcs headings, minus 15° at each end of the arc. See diagram below.

Permitted Landing Headings for Limited Heading Operations

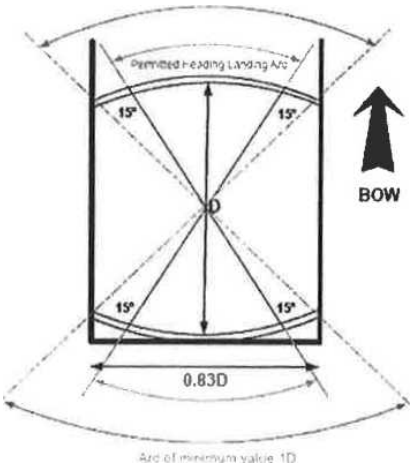

3.2 From any point on the periphery of the above mentioned D circle an obstacle-free approach and take-off sector should be provided which totally encompasses the safe landing area (and D circle) and which extends over a sector of at least 210°. Within this sector, from the periphery of the landing area and out to a distance that will allow for an unobstructed departure path appropriate to the helicopter that the landing area is intended to serve, only the following items may exceed the height of the landing area, but should not do so by more than 250 mm —

- the guttering (associated with the requirements in paragraph 4.2);
- the lighting required by section 4;
- the foam monitors;
- those handrails and other items associated with the landing area which are incapable of complete retraction or lowering for helicopter operations.

3.3 The bisector of the 210° Obstacle Free Sector (OFS) should normally pass through the centre of the D circle. The sector may be 'swung' by up to 15° as shown in Figure 1 below. Acceptance of the 'swung' criteria will normally only be applicable to existing vessels.

3.3.1 If, for an existing vessel, the 210° Obstacle Free Sector is swung, then it would be normal practice to swing the 180° falling 5:1 gradient by a corresponding amount to indicate, and align with, the swung OFS.

3.4 The diagram at Figure 1 shows the extent of the two segments of the 150° Limited Obstacle Sector (LOS) and how these are measured from the centre of the (imaginary) D Circle and from the perimeter of the Safe Landing Area (SLA). This diagram assumes, since helicopter landing areas are designed to the minimum requirement of accommodating a 1 D Circle, that the D Circle perimeter and SLA perimeter are coincidental. No objects above 0.05D are permitted in the first (hatched area in Figure 1) segment of the LOS. The first segment extends out to 0.62D from the centre of the D Circle, or 0.12D from the SLA perimeter marking.

The second segment of the LOS, in which no obstacles are permitted within a rising 1:2 slope from the upper surface of the first segment, extends out to 0.83D from the centre of the D Circle, or a further 0.21 D from the edge of the first segment of the LOS.

The exact point of origin of the LOS is assumed to be at the periphery of the D Circle.

Figure 1 - Obstacle Limitation showing position of Aiming Circle

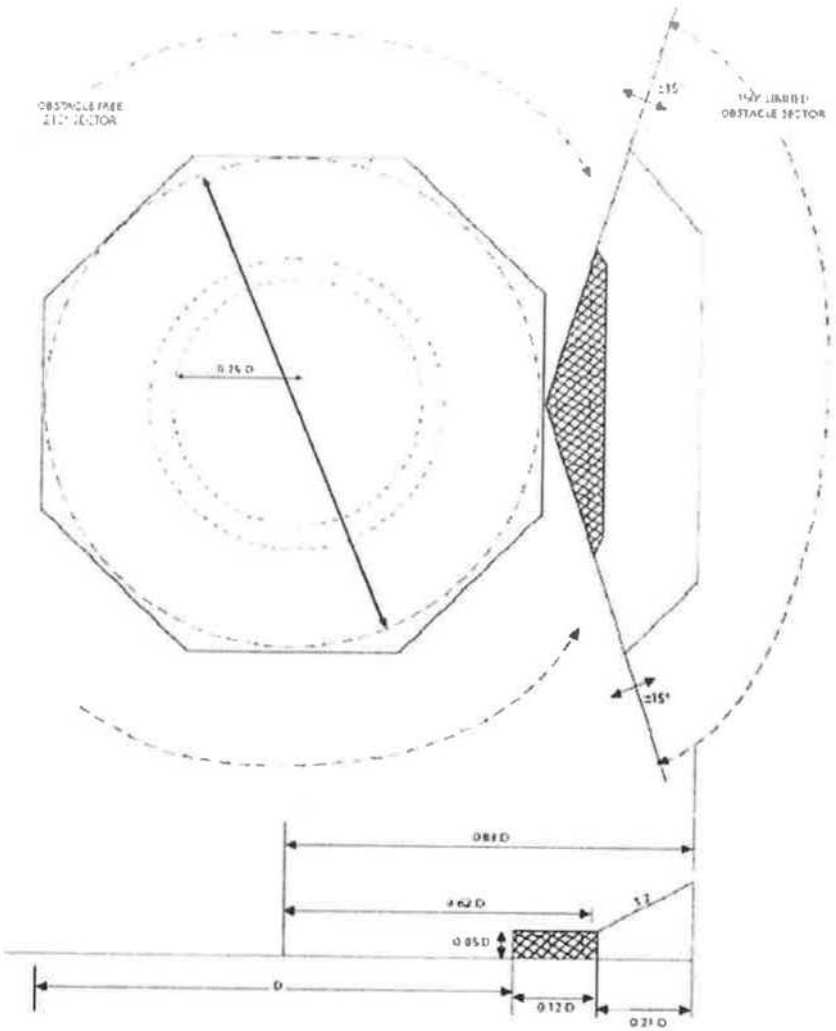

DRAWING NOT TO SCALE

3.4.1 Some helicopter landing areas are able to accommodate a SLA which covers a larger area than the declared D value; a simple example being a rectangular deck with the minor dimension able to contain the D Circle. In such cases it is important to ensure that the origin of the LOS (and OFS) is at the SLA perimeter as marked by the perimeter line. Any SLA perimeter should guarantee the obstacle protection afforded by both segments of the LOS. The respective measurements of 0.12D from the SLA perimeter line, plus a further 0.21D are to be applied. On these larger decks there is thus some flexibility in deciding the position of the perimeter line and SLA in order to meet the LOS requirements and when considering the position and height of fixed obstacles. Separating the origin of the LOS from the perimeter of the D Circle in Figure 1 and moving it to the right of the page will demonstrate how this might apply on a rectangular SLA.

3.4.2 The extent of the LOS segments will, in all cases, be lines parallel to the SLA perimeter line and follow the boundaries of the SLA perimeter (see Figure 1 above). Only in cases where the SLA perimeter is circular will the extent be in the form of arcs to the D circle. However, taking the example of an octagonal SLA as drawn at Figure 1, it would be possible to replace the angled corners of the two LOS segments with arcs of 12D and 0.33D centred on the two adjacent corners of the SLA; thus cutting off the angled corners of the LOS segments. If these arcs are applied they should not extend beyond the two corners of each LOS segment so that minimum clearances of 0.12D and 0.33D from the corners of the SLA are maintained. Similar geometric construction may be made to a square or rectangular SLA but care should be taken to ensure that the LOS protected surfaces minima can be satisfied from all points on the SLA perimeter.

3.5 Whilst application of the criteria in paragraph 3.4 above will ensure that no unacceptable obstructions exist above the helicopter landing area level over the whole 210º sector, it is necessary to consider the possibility of helicopter loss of height due to power unit failure during the latter stages of the approach or early stages of take-off. Accordingly, a clear zone should be provided below landing area level on all helicopter landing areas. This

falling 5:1 protected surface should be provided over **at least** 180° and ideally it should cover the whole of the 210° OFS, with an origin at the centre of the D Circle, and extending outwards to a distance that will allow for a safe clearance from obstacles below the landing area in the event of an engine failure for the type of helicopter that the landing area is intended to serve (see Figure 2). All objects that are underneath anticipated final approach paths should be assessed.

3.5.1 Research completed in 1999 demonstrated that, following a single engine failure in a twin engine helicopter after take-off decision point, and assuming avoidance of the deck edge, the resulting trajectory will carry the helicopter clear of an obstruction in the range 2:1 to 3:1, It is therefore only necessary for operators of multi-engine helicopters operated in performance classes one or two (as defined in ICAO Annex 6 Volume 3) to account for performance in relation to specified 5:1 falling gradient where infringements occur to a falling 3:1 rather than a 5:1 slope.

3.6 For practical purposes, when a safety net is fitted, the falling obstacle limitation surface can be assumed to be defined from points on the outboard edge of the helicopter landing area perimeter safety netting supports (1.5 metres from deck edge). Minor infringements of the surface by foam monitor platforms or access/escape routes may be accepted only if they are essential to the safe operation of the helicopter landing area but these infringements may also attract landing area availability restrictions.

Figure 2 Obstacle Free Areas - Below Landing Area Level

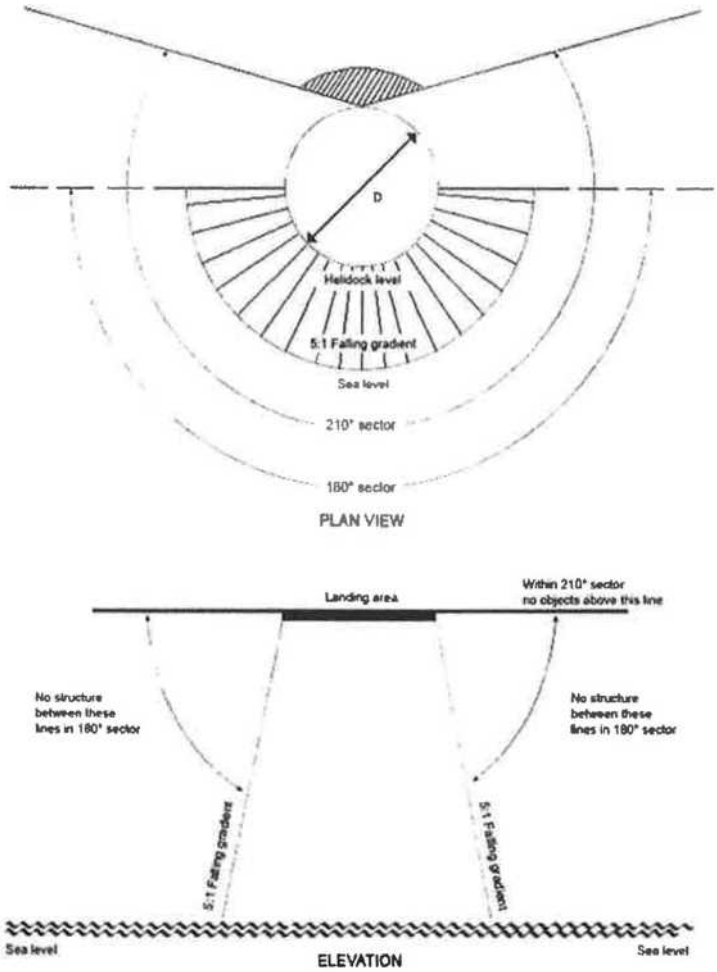

4.0 Landing Area Surface

4.1 The landing area should have an overall coating of non-slip material and all markings on the surface of the landing area should be made with the same non-slip materials. Whilst extruded section or grid construction aluminium (or other) decks may incorporate adequate non-slip profiles in their design, it is preferable that they are also coated with a non-slip material unless adequate friction properties have been designed into the construction. It is important that the friction properties exist in all directions. Over-painting friction surfaces on such designs may compromise the friction properties.

Recognised surface friction material is available commercially.

4.2 Helicopter landing areas should be cambered to a maximum gradient of 1:100. Any distortion of the helicopter landing area surface due to, for example, loads from a helicopter at rest should not modify the landing area drainage system to the extent of allowing spilled fuel to remain on the deck. A system of guttering should be provided around the perimeter to prevent spilled fuel from falling on to other parts of the vessel and to conduct the spillage to an appropriate drainage system.

The capacity of the drainage system should be sufficient to contain the maximum likely spillage of fuel on the deck. The calculation of the amount of spillage to be contained should be based on an analysis of helicopter type, fuel capacity, typical fuel loads and uplifts. The design of the drainage system should preclude blockage by debris. The helicopter landing area should be properly sealed so that spillage will only route into the drainage system.

4.3 For operations in adverse weather conditions a tautly-stretched rope netting should be provided to aid the landing of helicopters with wheeled undercarriages. The intersections should be knotted or otherwise secured to prevent distortion of the mesh. It is preferable that the rope be 20 mm diameter sisal, with a maximum mesh size of 200 mm. The rope should be secured every 1.5 metres round the landing area perimeter and tensioned to at least 2225 N. Netting made of material other than sisal may be considered but netting should not be constructed of polypropylene type material which is known to rapidly deteriorate and flake when exposed to weather. As a rule of thumb, it should not be possible to raise any part of the net by more than approximately 250 mm above the helicopter landing area surface when applying a vigorous vertical pull by hand. The location of the net should ensure coverage of the area of the aiming circle but should not cover the helicopter landing area identification marking or ‘t’ value markings. Some nets may require modification to outboard corners so as to keep the identification marking uncovered. In such circumstances the dimensions given in Table 2 below may be modified.

4.4 There are three sizes of netting as listed below in Table

2. The minimum size depends upon the type of helicopter for which the landing area is to be used as indicated in Table 1. Sizes are presented here for guidance only and nets of other sizes may be acceptable providing arrangements cover the whole of the aiming circle without obscuring the landing area identification markings.

Table 2 - Helicopter Deck Netting

Small	9 metres by 9 metres
Medium	12 metres by 12 metres
Large	15 etres by 15 metres

5.0 Helicopter Tie-Down Points

5.1 Sufficient flush fitting (when not in use) or removable semi-recessed tie-down points should be provided for securing the maximum sized helicopter for which the helicopter landing area is designed. They should be so located and be of such strength and construction to secure the helicopter when subjected to expected weather conditions. They should also take into account the inertial forces resulting from the movement of the vessel.

5.2 Tie-down rings should be compatible with the dimensions of tie-down strop attachments. Tie-down rings and strops should be of such strength and construction so as to secure the helicopter when subjected to expected weather conditions. The maximum bar diameter of the tie-down ring should be compatible with the strop hook dimension of the tie-down strops carried by the helicopter operator.

An example of a suitable tie-down configuration is shown at Figure 3. The Aviation Inspection Body or helicopter operator will provide guidance on the configuration of the tie-down points for specific helicopter types.

Figure 3 Example of Suitable Tie-down Configuration

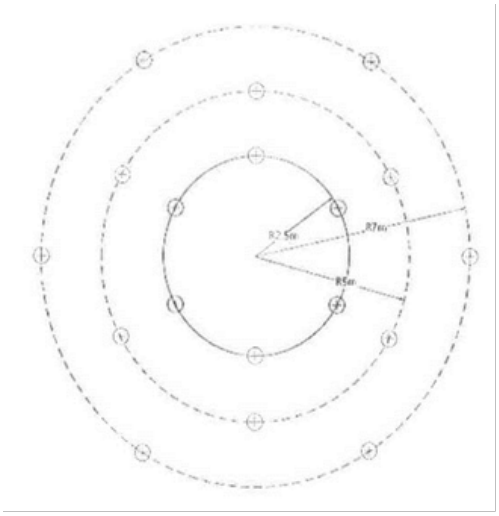

NOTES:

1 The tie-down configuration should be based on the centre of the Aiming Circle marking.

2 Additional tie-downs will be required in a parking area.

3 The outer circle is not required for D values of less than 22.2m.

6.0 Safety Net

6.1 Safety nets for personnel protection should be installed around the landing area except where adequate structural protection against falls exists. The netting used should be of a flexible nature, with the inboard edge fastened level, just below the edge of the helicopter landing area. The net itself should extend 1.5 metres in the horizontal plane and be arranged so that the outboard edge is not above the level of the landing area so that it has an upward and outward slope of at least 10°.

6.2 A safety net designed to meet these criteria should not act as a trampoline giving a 'bounce' effect. Where lateral or longitudinal centre bars are provided to strengthen the net structure they should be arranged and constructed to avoid causing injury to persons falling on to them. The ideal design should produce a 'hammock' effect which should securely contain a body falling, rolling or jumping into it, without serious injury. When considering the securing of the net to the structure and the materials used, care should

be taken that each segment will meet adequacy of purpose considerations. Polypropylene deteriorates over time; various wire meshes have been shown to be suitable if properly installed.

6.3 A full risk assessment to control the restricted movement of personnel on the helicopter landing area should be submitted for approval by the Aviation Inspection Body and Classification Society to demonstrate that safe passenger movement may take place without endangering the safety of the helicopter or the life of personnel on-board. The risk assessment of passenger movement described above should be used to demonstrate full mitigation of associated risks should non-fitment of a safety net as described in 6.1 and 6.2 above be requested.

7.0 Access Points

7.1 Many helicopters have passenger access on one side only and helicopter landing orientation in relation to landing area access points becomes important because it is necessary to ensure that embarking and disembarking passengers are not required to pass around the helicopter tail rotor, or under the front of the main rotor of those helicopters with a low profile rotor, should a 'rotors-running turn-round' be conducted.

7.2 There should be a minimum of two access/egress routes to the helicopter landing area. The arrangements should be optimised to ensure that, in the event of an accident or incident on the helicopter landing area, personnel will be able to escape upwind of the landing area. Adequacy of the emergency escape arrangements from the helicopter landing area should be included in any evacuation, escape and rescue analysis for the vessel, and may require a third escape route to be provided.

7.3 Where foam monitors are co-located with access points care should be taken to ensure that no monitor is so close to an access point as to cause injury to escaping personnel by operation of the monitor in an emergency situation.

7.4 Where handrails associated with landing area access/escape points exceed the height limitations given at paragraph 3.2 they should be retractable, collapsible or removable. When retracted, collapsed or removed the rails should not impede access/egress. Handrails which are retractable, collapsible and removable should be painted in a contrasting colour scheme. Procedures should be in place to retract, collapse, or remove them prior to helicopter

arrival. Once the helicopter has landed, and the crew have indicated that passenger movement may commence, the handrails may be raised and locked in position. The handrails should be retracted, collapsed, or removed again prior to the helicopter taking-off.

7.5 Where anti-collison lights are utilised, the helicopter crew will ensure they are switched off before the movement of passengers and/or freight takes place.

Annex 6: Section 4 - Visual Aids

1.0 General

1.1 The following sections outline the requirements for helicopter landing area markings which should be permanantly painted on the deck. Plans of the marking arrangements including dimensions should be submitted to the Aviation Inspection Body for approval.

1.2 Helicopter landing area perimeter line marking and lighting serves to identify the limits of the Safe Landing Area (SLA) for day and night operations.

1.3 A wind direction indicator (windsock) should be provided during helicopter operations and located so as to indicate the clear area wind conditions at the vessel location. It is often inappropriate to locate the windsock as close to the helicopter landing area as possible where it may compromise obstacle protected surfaces, create its own dominant obstacle or be subjected to the effects of turbulence from structures resulting in an unclear wind indication. The windsock should be illuminated for night operations.

2.0 Helicopter Landing Area Markings (See Figure 1 Below)

For the smallest landing areas (typically <16m) it may be necessary to reduce the size of the helideck markings appropriately. In such circumstances, the Aviation Inspection Body should be consulted as soon as possible.

2.1 The colour of the helicopter landing area should be a contrasting colour to the rest of the vessel's deck (preferrably dark grey or dark green). The perimeter of the SLA should be clearly marked with a white painted line 0.3 metres wide. (See section 3, paragraph 4.1.)

Figure 1 - Markings (Single Main Rotor Helicopters)

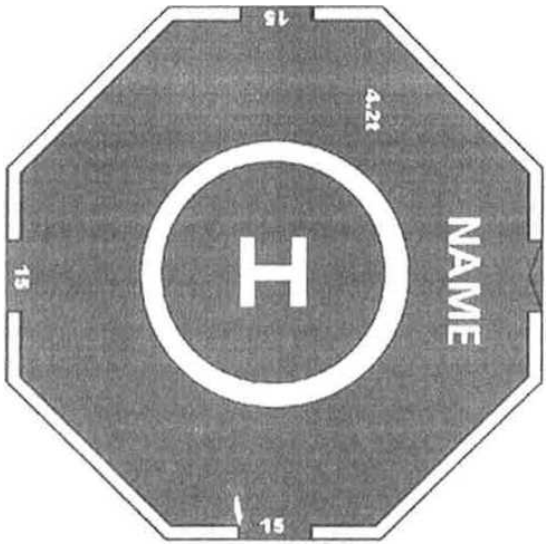

2.1.1 The light grey colour of aluminium may be acceptable in specific helicopter landing area applications where these are agreed with the Aviation Inspection Body. This should be discussed in the early design phase. In such cases the conspicuity of the helicopter landing area markings may need to be enhanced by, for example, outlining the deck marking lines and characters with a thin black line. Alternatively, conspicuity may be enhanced by overlaying white markings on a painted black background.

2.2 The origin of the 210° obstacle-free sector for approach and take-off as specified in section 3 should be marked on the helicopter landing area by a black chevron, each leg being 0.79 metres long and 0.1 metres wide forming the angle in the manner shown in Figure 2 below. On minimum sized helicopter landing areas where there is no room to place the chevron where indicated, the chevron marking, but not the point of origin, may be displaced towards the D circle centre. Where the obstacle-free sector is swung in accordance with the provision of section 3 paragraph 3.3 this should be reflected in the alignment of the chevron. The purpose of the chevron is to delineate the separation of the 210° OFS and 150° LOS. Prior to the helicopter being given clearance to land, the officer(s) in charge of the helicopter landing area operations team(s) should ensure that there are no obstacles in the 210° OFS. The black chevron may be painted on top of the

(continuous) white perimeter line to achieve maximum clarity for the helicopter landing area operations team.

2.3 The actual D-value of the helicopter landing area (see section 3. paragraph 3.1) should be painted on the helicopter landing area inboard of the chevron in alphanumeric symbols of 0.1 metres high.

2.4 The helicopter landing area D-value should also be marked around the perimeter of the helicopter landing area in the manner shown in Figure 1 in a colour contrasting (preferably white: avoid black or grey for night use) with the helicopter landing area surface. The D-value should be to the nearest whole number with 0.5 rounded down e g. 15.5 marked as 15 (see section 3, Table 1).

2.5 A maximum allowable mass marking should be marked on the helicopter landing area in a position which is readable from the preferred final approach direction i.e. towards the obstacle-free sector origin. The marking should consist of a two or three digit number expressed to one decimal place rounded to the nearest 100 kg and followed by the letter T to indicate the allowable helicopter weight in tonnes (1000 kg). The height of the figures should be 0.9 metres with a line width of approximately 0.12 metres and be in a colour which contrasts with the helicopter landing area surface (preferably white: avoid black or grey).

2.6 An aiming circle (touchdown/positioning marking) for each helicopter landing area should be provided as follows: (see Figures 1 and 3).

2.6.1 On smaller helicopter landing areas with a D-value up to and including 16.00m and for bow-mounted helicopter landing areas the aiming circle should be concentric with the helicopter landing area centre to ensure maximisation of space all around for safe personnel movement and optimisation of the visual cueing environment. On larger areas with a D-value greater than 16.00m, the centre of the aiming circle should be displaced 0.1 D from the centre of the D circle towards the outboard edge of the helicopter landing area along the bisector of the obstacle-free sector in order to achieve an increased safety margin for tail rotor clearance. The marking should be a yellow circle with an inner diameter of 0.5 times the certificated D-value of the helicopter landing area and a line width of not less than 0.5m for landing areas with a D-Value up to and including 16.00m and not less than 1.0m for landing areas with a D-Value greater than 16.00m.

Figure 2 - Helicopter landing area D-Value and Obstacle-free Marking (Not to scale)

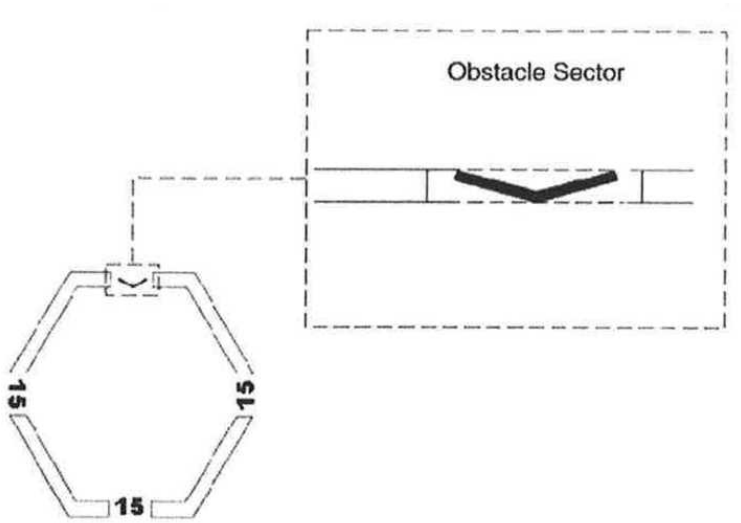

Figure 3 Aiming Circle Marking (Aiming Circle to be painted yellow)

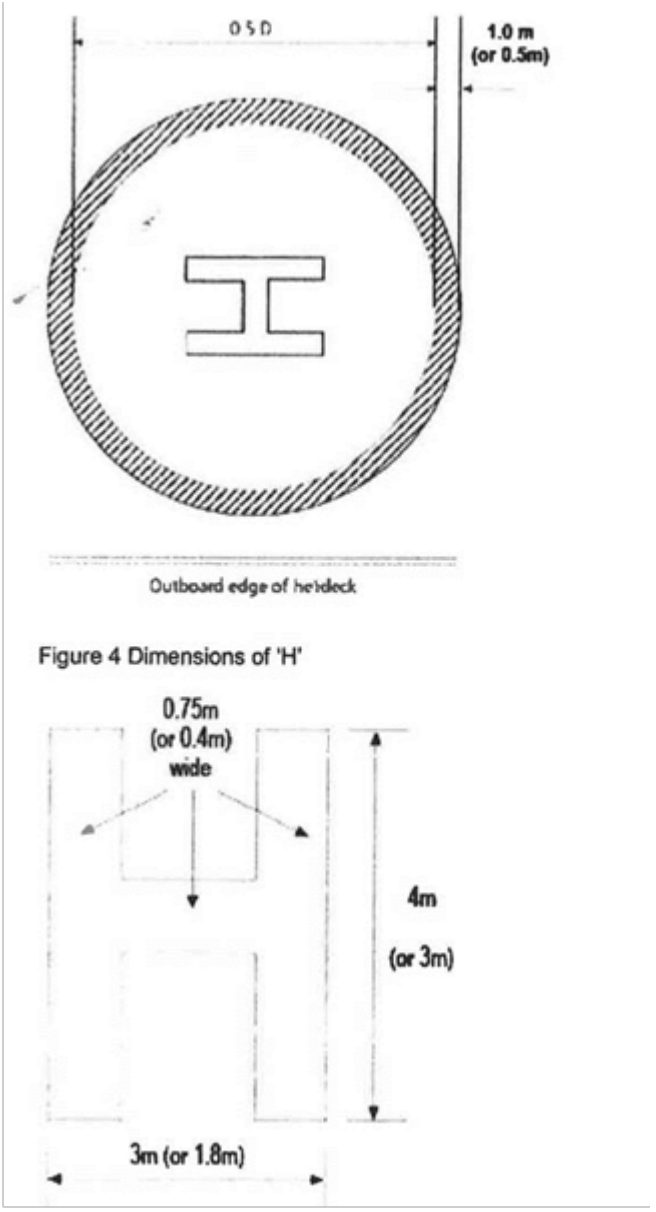

Figure 4 Dimensions of 'H'

2.6.2 On those decks where the aiming circle is concentric with the centre of the D circle or SLA, the need for some mitigation against concerns over tail rotor clearances should be considered; either by achieving more obstacle clearance in the 150° LOS or by adopting appropriate operational procedures (e.g., vessel to provide relative wind from beam or stern).

2.6.3 A "H" painted in a colour contrasting with the deck (preferably white) should be colocated with the aiming circle with the cross bar of the "H" lying along the bisector of the obstacle-free sector. The minimum H dimensions are shown in brackets for landing areas with a D-Value up to and including 16.00m, and without brackets for landing areas with a D-Value greater than 16.00m.

2.6.4 Where the obstacle-free sector has been swung in accordance with section 3 paragraph 3.3 the positioning of the aiming circle and "H" should comply with the normal unswung criteria. The "H" should, however, be orientated so that the bar is parallel to the bisector of the swung sector.

2.7 Prohibited landing heading sectors should be marked where it is necessary to protect the helicopter from landing or manoeuvring in close proximity to limiting obstructions which, for example, infringe the 150º limited obstacle sector protected surface. In addition, for existing vessels where the number of deck access points is limited prohibited landing heading sectors may be desirable to avoid placing the tail rotor in close proximity to access stairs. Where required, prohibited sector(s) are to be shown by red hatching of the aiming circle, with white and red hatching extending from the red hatching out to the edge of the safe landing area as shown in Figure 5.

2.7.1 When positioning over the touchdown area helicopters should be manoeuvred so as to keep the aircraft nose clear of the hatched prohibited sector(s) at all times.

2.8 For certain operational or technical reasons the master of the vessel may have to prohibit helicopter operations. In such circumstances, where the helicopter landing area cannot be used, the 'closed' state of the helicopter landing area should be indicated by use of the signal shown in Figure 6.

2.9 Colours should conform with the following BS 381C (1996) standard or the equivalent BS 4800 colour.

.1 RED

BS 381C: 537 (Signal Red)

BS 4800: 04.E.53 (Poppy)

.2 YELLOW

BS 381C: 309 (Canary Yellow)

BS 4800: 10.E.53 (Sunflower Yellow)

.3 DARK GREEN

BS 381C: 267 (Deep Chrome Green)

BS 4800: 14.C.39 (Holly Green)

.4 DARK GREY

BS 381C: 632 (Dark Admiralty Grey)

BS 4800: 18.B.25 (Dark Admiralty Grey)

Figure 5 - Example of Prohibited Landing Heading Marking



The position of the H and the orientation of the prohibited landing heading segment will depend on the obstacle.

Figure 6 - Signal Showing Landing on the Vessel is Prohibited

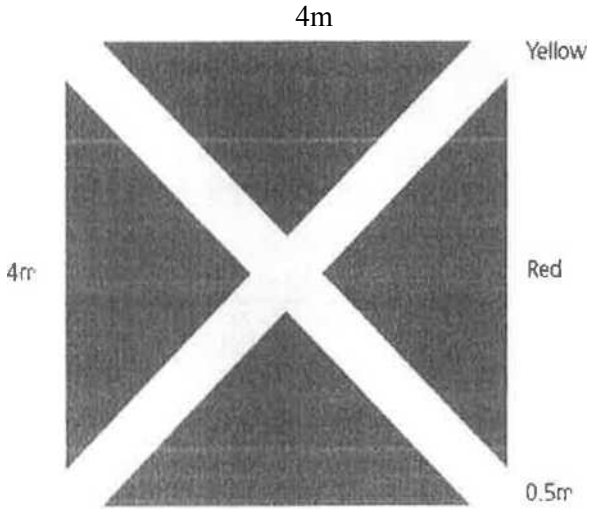

Signal covers 'H' inside aiming circle.

3.0 Lighting

3.1 The Safe Landing Area (SLA) should be delineated by green perimeter lights visible omnidirectionally from on or above the landing area. These lights should be above the level of the deck but should not exceed the height limitations in section 3 paragraph 3.2. The lights should be equally spaced at intervals of not more than 3 metres around the perimeter of the SLA, coincident with the white line delineating the perimeter (see section 4 para 2.1).

In the case of square or rectangular decks there should be a minimum of four lights along each side including a light at each corner of the safe landing area. The 'main beam' of the green perimeter lights should be of at least 30 candelas intensity (the full vertical beam spread specification is shown in Table1). Flush fitting lights may be used at the inboard (150° LOS origin) edge of the SLA.

3.2 Where the declared D-value of the helicopter landing area is less than the physical helicopter landing area, the perimeter lights should delineate the limit of the safe landing area (SLA) so that the helicopter may land safely by reference to the perimeter lights on the limited obstacle sector (LOS -150°) 'inboard' side of the helicopter landing

area without risk of main rotor collision with obstructions in this sector. By applying the LOS clearances (given in section 3, paragraph 3.4) from the perimeter marking, adequate main rotor to obstruction separation should be achieved. Touchdown for normal landing should be made by reference to the aiming circle. On helicopter landing areas where insufficient clearance exists in the LOS, a suitable temporary arrangement to modify the lighting delineation of the SLA, where this is found to be marked too generously, should be agreed with the Aviation Inspection Body by replacing existing green lights with red lights of 30 candelas intensity around the 'unsafe' portion of the SLA (the vertical beam spread characteristics for red lights should also comply with Table 1). The perimeter line, however, should be repainted in the correct position immediately and the area of deck between the old and new perimeter lines should be painted in a colour that contrasts with the main helicopter landing area. Use of flush fitting lights in the 150° sector perimeter will provide adequate illumination while causing minimum obstruction to personnel and equipment movement.

Table 1: ISO-candela diagram for helicopter landing area perimeter lights

Elevation	Intensity
0° - 90°	60cd max*
>20° - 90°	3cd min
>10°-20°	15cd min
0°- 10°	30cd min

-180° Azimuth +180°

3.3 The whole of the safe landing area (SLA) should be adequately illuminated if intended for night use. In the past, owners and operators have sought to achieve compliance by providing deck level floodlights around the perimeter of the SLA and/or by mounting floodlights at an elevated location 'inboard' from the SLA, e.g. floodlights angled down from the top of a bridge or hangar. Experience has shown that flood-lighting systems, even when properly aligned, can adversely effect the visual cueing environment by reducing the conspicuity of helicopter landing area perimeter lights during the approach, and by causing glare and loss of pilots' night vision during hover and landing. Furthermore, flood-

lighting systems often fail to provide adequate illumination of the centre of the landing area leading to the so-called 'black-hole effect'. It is essential therefore, that any floodlighting arrangements take full account of these problems.

3.4 The floodlighting should be arranged so as not to dazzle the pilot and, if elevated and located off the landing area clear of the LOS, the system should not present a hazard to helicopters landing and taking-off from the helicopter landing area. All floodlights should be capable of being switched on and off at the pilot's request. Setting up of lights should be undertaken with care to ensure that the issues of adequate illumination and glare are properly addressed and regularly checked. Adequate shielding of 'polluting' light sources can easily be achieved early on in the design stage, but can also be implemented on existing installations using simple measures. Temporary working lights which pollute the helicopter landing area lighting environment should be switched off during helicopter operations.

3.5 It is important to confine the helicopter landing area lighting to the landing area, since any light overspill may cause reflections from the sea. The floodlighting controls should be accessible to, and controlled by, the officer(s) in charge of the landing area operations team(s) or Radio Operator.

3.6 In seeking to develop an alternative system to conventional floodlighting, it has been demonstrated that Arrays of Segmented Point Source Lighting (ASPSL) in the form of encapsulated strips of Light Emitting Diodes (LEDs) can be used to illuminate the aiming circle and landing area identification marking ('H'). This arrangement has been found to provide the visual cues required by the pilot earlier on in the approach and more effectively than by using floodlighting, and without the disadvantages associated with floodlighting such as glare. Large Yacht owners are encouraged to consider appropriate systems in lieu of conventional floodlighting. A specification is available from the UK Aviation Inspection Body (see UK National Annex).

3.7 The quoted intensity values for lights apply to the intensity of the light emitted from the unit when fitted with all necessary filters and shades (see also paragraph 4 below).

3.8 The emergency power supply of the vessel should include

the helicopter landing area lighting. Any failures or outages should be reported immediately to the helicopter pilot/operator. The lighting should be fed from an Uninterrupted Power Supply (UPS) system capable of providing the required load for at least 15 minutes. This can be a stand-alone supply or be an additional loading requirement for the vessel's emergency power supplies.

4.0 Obstacles - Marking and Lighting

4.1 Fixed obstacles identified as a hazard to helicopters by the helicopter pilot/operator, or The Aviation Inspection Body should be readily visible from the air. If a paint scheme is necessary to enhance identification by day, alternate black and white, black and yellow, or red and white bands are recommended, not less than 0.25 metres wide. The colour should be chosen to contrast with the background to the maximum extent. Paint colours should conform with the references at paragraph 2.9 above.

4.2 Omnidirectional red lights of at least 10 candelas intensity should be fitted at suitable locations to provide the helicopter pilot with visual information on the proximity and height of objects which are higher than the landing area and which are close to it or to the LOS boundary. Objects which are more than 15 metres higher than the landing area should be fitted with intermediate red lights of the same intensity spaced at 10 metre intervals down to the level of the landing area (except where such lights would be obscured by other objects).

4.3 An omnidirectional red light of intensity 25 to 200 candelas should be fitted to the highest point of the vessel. Where this is not practicable the light should be fitted as near to the extremity as possible.

4.4 Red lights should be arranged so that the location of the objects which they delineate are visible from all directions above the landing area.

4.5 The emergency power supply of the vessel should include all forms of obstruction lighting. Any failures or outages should be reported immediately to the helicopter pilot/operator. The lighting should be fed from an Uninterrupted Power Supply (UPS) system capable of providing the required load for at least 15 minutes. This can be a stand-alone supply or be an additional loading requirement for the vessel's emergency power supplies.

Annex 6: Section 5 - Helicopter Landing Area Operational Standards

1.0 **Wind Direction**

1.1 Because the ability of a vessel to manoeuvre may be helpful in providing an acceptable wind direction in relation to the helicopter landing area location, information provided to the Aviation Inspection Body and helicopter operator is to include whether the vessel is normally fixed at anchor, single point moored, semi or fully manoeuvrable.

2.0 **Helicopter Landing Area Movement**

2.1 Vessels experience dynamic motions due to wave action which represent a potential hazard to helicopter operations. Operational limitations based on limited pitch, roll, heave, may therefore be applied to the landing area by the Aviation Inspection Body. Helicopter landing area downtime due to excessive deck motion can be minimised by careful consideration of the location of the landing area on the vessel at the design stage. Designers of helicopter landing areas should assess the impact of the resulting motion on operability at the earliest possible stage of the design process.

2.2 The helicopter landing area will be limited to receiving helicopters in the conditions agreed by the Aviation Inspection Body.

2.3 It is necessary for details of pitch, roll, and heave motions to be recorded on the vessel prior to, and during, all helicopter movements. Pitch and roll reports to helicopters should include values, in degrees, about both axes of the true vertical datum (i.e. relative to the true horizon) and be expressed in relation to the vessel's head. Roll should be expressed in terms of 'port' and 'starboard'; pitch should be expressed in terms of 'up' and 'down'; heave should be reported in a single figure, being the total heave motion of the helicopter landing area rounded up to the nearest metre. Heave is to be taken as the vertical difference between the highest and lowest points of any single cycle of the helicopter landing area movement. The parameters reported should be the maximum peak levels recorded during the ten minute period prior to commencement of helicopter operations.

2.3.1 The helicopter pilot is concerned, in order to make vital safety decisions, with the amount of 'slope' on, and the

rate of movement of, the helicopter landing area surface. It is therefore important that the roll values are only related to the true vertical and do not relate to any 'false' datum (i.e. a 'list') created, for example, by anchor patterns or displacement. There are circumstances in which a pilot can be aided by amplification of the heave measurement by reference to the time period (seconds) in terms of 'peak to peak.'

2.4 Reporting Format:

A standard radio message should be passed to the helicopter which contains the information on helicopter landing area movement in an unambiguous format. This will, in most cases, be sufficient to enable the helicopter crew to make safety decisions. Should the helicopter crew require other motion information or amplification of the standard message, the crew will request it (for example, yaw and heading information).

Standard report example:

Situation: The maximum vessel movement (over the preceding ten minute period) about the roll axis is 1° to port and 3° to starboard (i.e. this vessel may have a permanent list of 1° to starboard and is rolling a further 2° either side of this 'false' datum). The maximum vessel movement (over the preceding ten minute period) about the pitch axis is 2° up and 2° down. The maximum recorded heave amplitude over a single cycle (over the preceding ten minute period) is 1.5 metres.

Report: *'Roll 1° left and 3° right; Pitch 2° up and 2° down; heave two metres'*.

2.5 It is important to ensure that the deck motions reported to the helicopter pilot relate to the motion at the helicopter landing area. Very often pitch, roll and heave measure-ments are taken from a source far removed from the helicopter landing area location. If this source should happen to be midships and the helicopter landing area is located, for example, high up on the bow, the actual heave (and, in future accelerations,) at the helicopter landing area are likely to be far in excess of the source measure-ment. Software packages are available to provide heli-copter landing area location corrected movement data from a source at a different location. Ideally, deck motion measuring equipment should be located at (attached to the underside of) the helicopter landing area.

3.0 **Aircraft Operational Data - Reporting and Recording**

3.1 In addition to the data covered by paragraph 2.3 above, it is essential that vessels are provided with means of ascertaining and reporting at any time —

.1 the wind speed and direction using aviation approved equipment to ICAO standard;

.2 the air temperature;

.3 the barometric pressure using aviation approved equipment to ICAO standard;

.4 the visibility, cloud base and cover; and

.5 the sea state.

3.2 Air temperature and barometric pressure should be measured by conventional instruments approved to ICAO standards. An indication of wind speed and direction will be provided visually to the pilot by the provision of a windsock coloured so as to give maximum contrast with the background. However, for recording purposes, an anemometer positioned in an unrestricted airflow is required. A second anemometer, located at a suitable height and position can give useful information on wind velocity at hover height over the helicopter landing area in the event of turbulent or deflected airflows over the deck. Visibility, cloud conditions, and sea state will normally be assessed by visual observations.

3.3 Measuring instruments used to provide the data listed in paragraph 3.1 above should be periodically calibrated in accordance with the manufacturer's recommendations in order to provide continuing accuracy.

4.0 **Location In Respect to Other Landing Areas In the Vicinity**

4.1 Vessels with helicopter landing areas may be positioned adjacent to other vessels or large land-based structures so that interference/overlap of obstacle protected surfaces occur. Also on some vessels there may be more than one helicopter landing area which may result in a confliction of obstacle free sectors.

5.0 Control of Crane Movement in the Vicinity of Landing Areas

5.1 Cranes can adversely distract pilots' attention during helicopter approach and take-off from the helicopter landing area as well as infringe fixed obstacle protected

surfaces. Therefore it is essential that when helicopter movements take place (±5 mins) crane work ceases and jibs, etc. are positioned clear of the obstacle protected surfaces and flight paths.

5.2 The Officer(s) in charge of helicopter landing area operations team(s) should be responsible for the control of cranes in preparation for and during helicopter operations.

6.0 General Precautions

6.1 Whenever a helicopter is stationary on board a vessel with its rotors turning, no person should, except in case of emergency, enter upon or move about the helicopter landing area other than within view of a crew member or the officer(s) in charge of helicopter landing area operations team(s) and at a safe distance from the engine exhausts and tail rotor of the helicopter. It may be dangerous to pass close to the front of those helicopters which have a low main rotor profile.

6.2 The practical implementation of paragraph 6.1 above is best served through consultation with the helicopter pilot/operator for a clear understanding of the approach paths approved for personnel and danger areas associated with a rotors-running helicopter. These areas are type-specific but, in general, the approved routes to and from the helicopter are at the 2-4 o'clock and 8-10 o'clock positions. Avoidance of the 12 o'clock (low rotor profile helicopters) and 6 o'clock (tail rotor danger areas) positions should be maintained.

6.3 Where anti-collison lights are utilised, the helicopter landing operations team will ensure they are switched off before the movement of passengers and/or freight takes place. The helicopter landing area should be kept clear of all personnel while anti-collision lights are on.

7.0 Helicopter Landing Area Operations Manual and General Requirements

7.1 The maximum helicopter weight and D-value for which the helicopter landing area has been designed and the maximum size and weight of helicopter for which the vessel is certificated should be included in the Helicopter Landing Area Operations Manual and Landing Area Certificate. The extent of the obstacle-free area should also be stated and reference made to any helicopter landing area operating limitation imposed by helicopter operators or the Aviation Inspection Body as a result of non-

compliances. Details of non-compliances themselves should also be listed.

8.0 Helicopter Operations Support Equipment

8.1 Provision should be made for equipment needed for use in connection with helicopter operations including —

.1 chocks and tie-down straps;

.2 heavy-duty, calibrated, accurate scales for passenger baggage and freight weighing;

.3 a suitable power source for starting helicopters if helicopter shut-down is seen as an operational requirement; and

.4 equipment for clearing the helicopter landing area of snow and ice and other contaminants.

8.2 Chocks should be compatible with helicopter undercarriage/wheel configurations. Helicopter operating experience has shown that the most effective chock for use on helicopter landing areas is the 'NATO sandbag' type. Alternatively, 'rubber triangular' or 'single piece fore and aft' type chocks may be used as long as they are suited to all helicopters likely to operate in the helicopter landing area. The 'rubber triangular' chock is generally only effective on decks without nets.

8.3 For securing helicopters to the helicopter landing area only adjustable tie-down straps should be used.

9.0 Radio Communication Equipment

9.1 At least one aeronautical frequency radio licensed by the Administration responsible for the airspace in which the helicopter is intended to operate when approaching the vessel should be fitted on board the vessel.

9.2 Radio operators of offshore aeronautical radio stations are required to hold a Certificate of Competence.

Annex 6: Section 6 - Example Inspection Checklist

1.0 General

The following checklist indicates in general terms the minimum number of helicopter landing area physical characteristics which the Administration considers should be examined during initial inspection and periodic surveys carried out by the Aviation Inspection Body to confirm that there has been no alteration or deterioration in condition.

1.1 Helicopter Landing Area Dimensions:

.1 D-value as measured;

.2 Declared D-value;

.3 Deck shape;

.4 Scale drawings of deck arrangement.

1.2 Helicopter Landing Area Conditions:

.1 Type of surface, condition, friction, contaminant free;

.2 Fuel retention;

.3 Deck landing area net;

.4 Perimeter safety netting;

.5 Tie-down points.

1.3 Environment:

.1 Machinery exhausts;

.2 Hot and cold gas emissions;

.3 Presence of turbulence.

1.4 Obstacle Protected Surfaces (Minima):

.1 Obstacle free sector (210°);

.2 Limited obstacle sector (150°);

.3 Falling (5:1 / 3:1) gradient;

.4 Note if .1 or .3 above are swung from normal axis.

1.5 Visual Aids:

.1 Deck surface;

.2 General condition of painted markings;

.3 Location of H;

.4 Aiming circle;

.5 Safe Landing Area perimeter line - relationship to Chevron;

.6 D-value marked within perimeter line;

.7 Chevron marking (if reduced the sector is to be marked in degrees);

.8 Certification marking (exact D-value);

.9 Maximum allowable weight marking;

.10 Conspicuity of painted markings;

.11 Wind indicator;

.12 Perimeter lighting;

.13 Floodlighting;

.14 Obstruction lighting;

.15 Marking of dominant obstacles;

.16 Shielding of working lights (helicopter landing area light pollution).

1.6 Fuel System:

.1 JetA-1 installation;

.2 Hose;

.3 Earthing equipment;

.4 Fuel Records.

1.7 Rescue and Fire Fighting Facilities

.1 Principal agent;

.2 Complementary media;

.3 Rescue equipment;

.4 Personal protective equipment.

1.8 Crew Training Certification

.1 Training records.

Annex 6: Section 7 - Helicopter Hangar Facilities

1.0 **General**

1.1 Helicopter hangar arrangements on board should be in accordance with requirements for helicopter refuelling and hangar facilities contained within SOLAS II-2. In addition, the requirements outlined in this section of Annex 6 of the Code should be complied with in full. The requirements in this section are based upon the use of helicopters run on Jet A-1 fuel. When developing hangar arrangements, consideration should be given to the type of fuel on which the helicopter to be stowed is run.

1.2 The following plans and particulars are to be submitted to the Classification Society and Administration for approval —

.1 Hangar general arrangement and structure;

.2 Helicopter lift, hoist, and movement arrangements (if appropriate);

.3 Structural fire protection;

.4 Fire detection and extinguishing arrangements;

.5 ventilation arrangements.

2.0 **Hangar Design Considerations**

2.1 Helicopter hangar(s) on board should be positioned, as far as is practicable, so as to preclude excessive movement and acceleration forces. Guidance on this should be sought from the helicopter manufacturer/operator. Where possible, the positioning of hangar(s) should be determined through the use of computer modelling and/or wind tunnel testing (refer also to section 3, para 2.2.3).

2.2 The perimeter of hangar(s) and any associated entrance or hatchway inclusive of helicopter lift arrangements should provide a stowage/maintenance box allowing for a minimum 0.5m clearance at any point around the helicopter and rotors when the helicopter is in its stowed condition.

2.3 Where appropriate CCTV should be used to ensure visibility of the aircraft at all times.

Annex 6: Section 8 - Helicopter Fueling Facilities

1.0 **General**

This section outlines the requirements for the storage and transfer of Jet A-1 fuel. When developing fuelling arrangements, consideration should be given to the type of fuel on which the helicopter to be operated is run. In addition, all facilities for the storage and handling of aviation fuels on board should be grade identified using the appropriate American Petroleum Industry (API) markings for the grade of fuel used. Aviation fuel facilities should also be fully segregated from any other fuel system.

1.1 Helicopter fueling facilities on board should be in accordance with requirements for helicopter refuelling and hangar facilities in SOLAS II-2. In addition, the requirements outlined in this section of Annex 6 of the Code should be complied with in full unless a safety

case is made to, and approved by, the Administration, based on an alternative arrangement according to Classification Society Rules or guidance from the Aviation or Petro-Chemical industries.

1.2 Refuelling and defuelling operational considerations should be agreed with the helicopter pilot/operator and Aviation Inspection Body.

1.3 The following plans and particulars are to be submitted to the Aviation Inspection Body and Classification Society for approval —

.1 Description of fuel with statement of minimum flash point (closed cup test);

.2 Arrangement of fuel storage and piping;

.3 Arrangements for drainage, ventilation and sounding of spaces adjacent to storage tanks;

.4 Details and approval certification of pumping units;

.5 Structural fire protection arrangements of all spaces to contain aviation fuel;

.6 Fire detection and extinguishing arrangements;

.7 Ventilation arrangements.

1.4 When developing operational procedures for the movement of aviation fuel onboard, the restricted use of radio frequency equipment including portable phones with regard to transmission sparks should be considered.

2.0 **Storage of Aviation Fuel**

2.1 Fuel storage tanks should be of baffle-free, stainless steel, cylindrical construction, located in a designated area as remote as practicable from machinery and accommodation spaces, and be suitably isolated from areas where there are sources of ignition.

2.2 Fuel storage tanks should be provided with an intrinsically safe level indicator fitted through the top of the tank, and a ¾ inch sampling valve at the bottom of the tank (low end) to allow for samples to be taken as per paragraph 5.3 of this section of Annex 6. The minimum slope of the tank to the sampling point should be 1:30.

2.3 The storage and handling area should be permanently marked. Instructions for filling fuel and, if appropriate, emptying fuel, should be posted in the vicinity of the filling area.

2.4 Tank ventilation (breather) pipes should be fitted with an approved vent head with pressure-vacuum valve, flame arrester, and desiccant. The vent outlet should be located no less than 2.3m above the weather deck in a safe position away from accommodation spaces, ventilation intakes and equipment that may constitute an ignition hazard. Particular attention should also be directed to the height of the tank vent and overflow with respect to the design head of the tank.

High level alarm arrangements should be provided to indicate when fuel storage tanks are close to being filled in excess of maximum operating levels. Alternative arrangements for tank venting may be accepted subject to approval from the Administration.

2.5 A coaming surrounding the fuel storage tanks, associated piping and the pumping unit should be provided. The height of this coaming should be at least 150 mm, so as to contain fuel spillage as well as fire extinguishing agents. Where the pumping unit is situated at a remote distance from the fuel storage tank, a separate coaming of the same minimum height should be provided around the pumping unit. For tanks forming an integral part of the vessel's structure, cofferdams with permanently fitted gas detectors should be provided as necessary to contain leakage and prevent contamination of the fuel. Also, it should be ensured that there is no common boundary between the fuel storage tank and accommodation or high fire risk spaces.

2.6 Arrangements for drainage from within the coaming area described in 2.5 above should be as follows —

.1 Permanent piping and a suitable holding (waste) tank (compliant with 2.1 and 2.2) should be fitted so that drainage can be either led to the holding tank (for draining fuel) or discharged overboard (for draining water) through a three-way valve. No other valve should be permitted in the drain piping. The holding tank should be clearly labeled to distinguish between itself and the main storage tank.

.2 The cross sectional area of the drain pipe should be twice that of the storage tank outlet pipe.

.3 The area within the coaming should be sloped towards the drain pipe.

2.7 Drainage of cofferdam spaces should be entirely separate

from the machinery space drainage arrangements. As far as is practicable, fuel sampling points should be low points on piping and should provide a "closed sampling" visi-jar system fitted with arrangements to prevent the spring-loaded valve from being locked in an open position.

2.8 Air pipes for the cofferdam space should be led to a point at least 2.3m above the weather deck through a safe space and fitted with an approved air pipe head fit for purpose and having a wire gauze diaphram of corrosion resistant material.

2.9 Access to each cofferdam should be provided by at least two manholes from the open deck, each fitted with gas-tight manhole covers. Cofferdams should be cleaned prior to opening manhole covers, using an induced draught certified safe ventilation fan for a minimum of 20 minutes. A notice to this effect should be fitted to each manhole.

3.0 **Fuel Pumping and Storage Tank Filling**

3.1 All tank outlet valves and filling valves should be mounted directly onto the tank and be capable of being closed from a remote location outside the compartment in the event of a fire in the compartment. Ball valves are to be of the stainless steel, anti-static, fire tested type.

3.1.1 If more than one storage tank is fitted then fuel should be pumped through suitable filtration if it is to be transferred from one tank to another.

3.2 Filling arrangements for fuel tanks should be through closed piping systems with outlet ends configured to reduce turbulence and foaming of the fuel. If the storage tank(s) are filled from the top, the filler pipe should pass through the tank to the bottom and terminate with a 90° bend so that fuel flows over the bottom of the tank to reduce the possibility of a build-up of static charge.

3.3 Pumping units should be easily accessible and capable of being controlled from both the fuel station and a position remote from the fuel station. The device to prevent over-pressurisation as required by SOLAS 2-II should be fitted with a relief valve to discharge either to the suction side of the pump(s) or to a holding tank complying with the arrangements of this section of Annex 6 of the Code.

3.4 When not in use, fuel filling equipment should be stowed in a locker that is well ventilated and drained.

3.5 Suitable filtration arrangements in accordance with

appropriate American Petrolium Industry (API) and British Energy Institute (or equivalent) standards should be provided to reduce the level of water and particulate contamination of the fuel to within the limits specified by the helicopter manufacturer. The minimum requirements are; delivery into storage through a Filter Water Seperator (FWS), filtration out of storage through Filter Water Seperator (FWS), filtration at the point of filling (e.g. on the helicopter landing area), via a Filter Monitor (FM). Filter vessels should be fitted with a differential pressure guage and automatic air eliminator.

3.6 In general, all piping systems should be located clear of accommodation spaces, escape routes, embarkation stations and ventilation openings and should not pass through category A machinery spaces. However, where arrangements are such that piping has to pass through accommodation spaces, service spaces, escape routes, or embarkation stations double skinned piping is to be used or pipes should be enclosed in a cofferdam.

3.7 Means should be provided for keeping deck spills away from accommodation and service areas.

3.8 Drip trays for collecting replenishment oil residues in pipelines and hoses should be provided beneath pipe and hose connections in the manifold area.

3.9 It is recommended that a "Y" strainer should be fitted on the pump suction to protect the pump itself.

4.0 **Refueling and Defueling Helicopters**

4.1 Refueling and defueling hoses should be of one continuous length, smooth bore, synthetic rubber construction, and semi-conducting, conforming to EN1361 type C or API standards. A hose end pressure controller should also be provided for fuelling hoses to prevent the possibility of the helicopter fuel tanks being subject to excessive pressure. Delivery Nozzles should be fitted with minimum 100 mesh strainer element, and in the case of gravity overwing nozzles, they should be situated in the spout. Trigger mechanisms should not have hold-open ratchets.

4.2 Provision should be made to electrically bond the helicopter to the vessel prior to commencement, and throughout the process of, any refueling and defueling procedures. The maximum resistance of such bonding systems should be less than 0.5 ohms.

4.3 Where appropriate CCTV should be used to ensure full view from the bridge of all helicopter refueling activities that would normally be hidden from view.

5.0 **Prevention of Fuel Contamination**

5.1 Materials and/or their surface treatment used for the storage and distribution of fuel should be selected such that they do not introduce contamination or modify the properties of the fuel. The use of copper or zinc compounds in fuel piping systems where they may come into contact with fuel is not permitted. Copper-nickel materials are permissible but should be limited to positions after filtration and water absorption equipment.

5.2 The location and arrangement of air pipes for fuel tanks are to be such that in the event of a broken vent pipe, this does not directly lead to ingress of seawater or rain water.

5.3 Fuel samples should be taken on a daily basis throughout the fuel handling, storage, and distribution process from the tank in use, all filter vessels, and at the hose end. Fuel samples should be recorded and kept for 24 hours in a 1 US Gallon glass jar then disposed of in the aviation fuel waste/holding tank referred to in paragraph 2.6.1. A record should be kept of all fuel movements on board. Fuel in the holding tank may be passed to the main tank provided that suitable filtration is filled in accordance with paragraph 3.5 to the satisfaction of the aviation inspection body.

5.4 At least one member of crew on-board the vessel should be trained in the handling of aviation (JetA1) fuel and associated quality control procedures. This person(s) should oversee all operations involving the movement of aviation fuel on-board. Further guidance on such training may be obtained from the fuel supplier, and marine aviation consultants.

6.0 **Fuel Pumping Spaces / Compartments**

6.1 Where it is intended to install fuel transfer pumps for handling aviation fuel in a separate compartment, the pump room(s) should be totally enclosed and have no direct communication, through e.g. bilge piping systems and ventilation systems, with machinery spaces; should be situated adjacent to the fuel storage tanks; and should be provided with ready means of access from the weather deck.

6.2 Alarms and safety arrangements should be provided as indicated in 6.3 and table 1, below.

Table 1 - Alarms

Item	Alarm	Note
Bulkhead gland temperature	High (See Note 1)	Any machinery item
Pump bearing and casing temperature	High (See Note 1)	Any machinery item
Bilge level	High	—
Hydrocarbon concentration	High (See Note 2)	> 10% LEL

NOTES

1. The alarm signal is to trigger continuous visual and audible alarms in the pump room or the pump control station.
2. This alarm signal is to trigger a continuous audible and visual alarm in the pump room, pump control station and machinery control room.

6.3 A system for continuously monitoring the concentrations of hydrocarbon gases within the pump room should be fitted. Monitoring points are to be located in positions where potentially dangerous concentrations may be readily detected.

7.0 **Ventilation**

7.1 Fuel pump room(s), fuel storage room(s) and other closed spaces which contain fuel handling equipment, and to which regular access is required during cargo handling operations, are to be provided with permanent ventilation system(s) of the mechanical extraction type.

7.2 The ventilation system(s) should be capable of being operated from outside the compartment being ventilated and a notice should be fixed near the entrance stating that no person is to enter the space until the ventilation system has been in operation for at least 15 minutes.

7.3 The ventilation system(s) should be capable of 20 air changes per hour, based on the gross volume of the pump room or space.

7.4 Protection screens of not more than 13 mm square mesh should be fitted in outside openings of ventilation ducts, and ventilation intakes should be so arranged as to minimise the possibility of re-cycling hazardous vapours from any ventilation discharge opening. Vent exits are to

be arranged to discharge upwards.

7.5 The ventilation should be interlocked to the lighting system (except emergency lighting) such that the pump room lighting may only come on when the ventilation is in operation. Failure of the ventilation system is not to cause the lighting to go out and failure of the lighting system is not to cause loss of the ventilation system.

7.6 **Non - Sparking Fans for Hazardous Areas**

7.6.1 The air gap between impeller and housing of ventilation fans should be not less than 0.1 of the impeller shaft bearing diameter or 2 mm whichever is the larger, subject also to compliance with 7.6.2.5. Generally, however, the air gap need be no more than 13 mm.

7.6.2 The following combinations of materials are permissible for the impeller and the housing in way of the impeller —

.1 Impellers and/or housings of non-metallic material, due regard being paid to the elimination of static electricity;

.2 Impellers and housings of non-ferrous metals;

.3 Impellers and housings of austenitic stainless steel;

.4 Impellers of aluminium alloys or magnesium alloys and a ferrous housing provided that a ring of suitable thickness of non-ferrous material is fitted in way of the impeller;

.5 Any combination of ferrous impellers and housings with not less than 13 mm tip clearance;

.6 Any combination of materials for the impeller and housing which are demonstrated as being spark proof by appropriate rubbing tests.

7.6.3 The following combinations of materials for impellers and housing are not considered spark proof and should not be permitted —

.1 Impellers of an aluminium alloy or magnesium alloy and a ferrous housing, irrespective of tip clearance;

.2 Impellers of a ferrous material and housings made of an aluminium alloy, irrespective of tip clearance;

.3 Any combination of ferrous impeller and housing with less than 13mm tip clearance, other than permitted by 7.6.3.2.

7.6.4 Electrostatic charges both in the rotating body and the casing should be prevented by the use of antistatic materials (i.e. materials having an electrical resistance between 5 x 104 ohms and 108 ohms), or special means should be provided to avoid dangerous electrical charges on the surface of the material.

7.6.5 Type approval tests on the complete fan should be carried out to the satisfaction of the Classification Society.

7.6.6 Protection screens of not more than 13 mm square mesh should be fitted in the inlet and outlet of ventilation ducts to prevent the entry of objects into the fan housing.

7.6.7 The installation of the ventilation units on board should be such as to ensure the safe bonding to the hull of the units themselves.

ANNEX 7 AMENDMENTS TO THE TEXT OF THE BAHAMAS YACHT CODE EDITION 1